Elektronik.
Wir bauen die Elemente.

VALVO

Peripherie-schaltungen für CRT-Controller, Datenübertragung u. Sprachsynthese

Datenbuch

1984

Elektronik.
Wir bauen die Elemente.

Unser Arbeitsgebiet – besonders die Mikroelektronik – entwickelt sich immer rascher zum Motor für viele Innovationen. Mit gründlicher Information und Beratung möchten wir Ihnen helfen, diese Entwicklung zu nutzen, um im Wettbewerb vorn zu sein.

Zugegeben, wir sind dabei in einer besonders günstigen Lage: Als Unternehmensbereich Bauelemente des Hauses Philips verbindet Valvo die Erfahrung und Beweglichkeit des deutschen Spezialisten mit der Stärke des weltweit größten Anbieters von elektronischen Bauelementen.

Die Vorteile zeigen sich zum Beispiel in der hohen Innovationsrate, da wir die eigene Forschung und Entwicklung durch internationalen Forschungsverbund ergänzen. Zugleich verfügen wir über das breiteste Produktprogramm in Deutschland. Wir können daher unseren Partnern innovative, vielseitige Problemlösungen aus einer Hand anbieten. Mit Produkten, die pünktlich zur Stelle sind. Hohe Lieferzuverlässigkeit, weit entwickelte Fertigungsverfahren, kompromißlose Qualitätssicherung sind für uns selbstverständlich.

Wie der Erfolg zeigt, ist das eine gute Plattform für die Zusammenarbeit. Damit daraus eine langfristige, erfreuliche Partnerschaft wird, sind wir bereit, Probleme flexibel und unbürokratisch zu lösen.

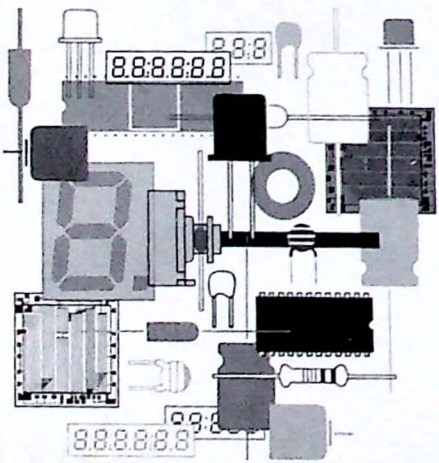

Information ist der erste Schritt. Sprechen Sie mit uns, wenn es um Bauelemente geht.

Vertriebsprogramm:

Integrierte Schaltungen
- **Bipolar analog und digital**
- **MOS und Hybrid**

Mikroprozessoren und -computer
- **Bipolar- und MOS-Systeme**
- **Entwicklungssysteme, Software und Support**

Diskrete Halbleiter
- **Dioden und Transistoren**
- **Thyristoren und Triacs**
- **Optoelektronische Bauelemente**
- **Sensoren**

Kondensatoren
Widerstände und Potentiometer
Heiß- und Kaltleiter, Varistoren
Hart- und weichmagnetische Ferrite
Piezoxide
Fernsehbildröhren und Ablenkmittel
Monitorröhren und Ablenkmittel
Transformatoren
Tuner
Lautsprecher

Spezialröhren und -bauteile
- **Bildaufnahme und -wiedergabe**
- **Strahlungsmeßtechnik**
- **Hochfrequenz- und Mikrowellenerzeugung**
- **Mikrowellenbaugruppen**
- **Reed-Kontakte**

Quarz-Bauelemente
Steckverbinder, Leiterplatten und Multilayer
Motoren und Getriebe

Diese Stichwortliste gibt einen groben Überblick über unser Vertriebsprogramm, das insgesamt Bauelemente aus mehr als hundert Technologien bietet.

VALVO

Peripherie-schaltungen für CRT-Controller, Datenübertragung und Sprachsynthese

VALVO

Herausgeber: Valvo
Unternehmensbereich Bauelemente der Philips GmbH
Burchardstraße 19, 2000 Hamburg 1

Verlag Boysen + Maasch, Hermannstraße 31, 2000 Hamburg 1

ISBN 3-87095-183-4

Druck: Photo Copie GmbH, 2000 Hamburg 1

August 1984

Dieses Datenbuch ist vor allem für den Konstrukteur und Geräteentwickler bestimmt.

Bestellungen oder Anfragen richten Sie bitte an

Valvo
Unternehmensbereich Bauelemente der Philips GmbH
Burchardstraße 19, Postfach 10 63 23, 2000 Hamburg 1
Telefon (0 40) 32 96-0, Telefax (0 40) 32 96-213, Telex 2 15 401-0 va d

oder an die Valvo Zweigbüros bzw. Valvo Distributoren
(siehe 3. Umschlagseite)

Dieses Datenbuch gibt keine Auskunft über Liefermöglichkeiten.
Die angegebenen Daten dienen allein der Produktbeschreibung und sind nicht als zugesicherte Eigenschaften im Rechtssinne aufzufassen. Etwaige Schadensersatzansprüche gegen uns – gleich aus welchem Rechtsgrund – sind ausgeschlossen, soweit uns nicht Vorsatz oder grobe Fahrlässigkeit trifft.
Es wird keine Gewähr übernommen, daß die angegebenen Schaltungen oder Verfahren frei von Schutzrechten Dritter sind.
Ein Nachdruck – auch auszugsweise – ist nur zulässig mit Zustimmung des Herausgebers und mit genauer Quellenangabe.

Einige Bauelemente enthalten Beryllium-Oxid (BeO), das in fein verteilter Form giftig ist. Bei bestimmungsgemäßer Verwendung der Bauelemente entstehen keine Gefahren. Ggfs. sind entsprechende Sicherheits- und Umweltvorschriften zu beachten.

CONTENTS

Peripheral Circuits for CRT - Controllers

SCN 2670 Display Character and Graphics Generator (DCGG)... 11
SCN 2671 Programmable Keyboard and Comm Controller (PKCC).. 25
SCN 2672 Programmable Video Timing Controller (PVTC)..... 47
SCB 2673 Video Attributes Controller (VAC)..... 69
SCN 2674 Advanced Video Display Controller (AVDC)..... 81
SCB 2675 Color / Monochrome Attributes Controller (CMAC).... 109
SCB 2675T Color / Monochrome Attributes Controller (CMAC).... 121
SCB 2677 Video Attributes Controller (VAC)..... 123

Peripheral Circuits for Data Communication

SCN 2641 Asynchronous Communications Interface 135
SCN 2651 Programmable Communications Interface (PCI)..... 147
SCN 2652 Multi-Protocol Communications Controller 161
SCN 2653 Polynomial Generator Checker (PGC)..... 179
SCN 2661 Enhanced Programmable Communications Interface ... 197
SCN 2681 Dual Asynchronous Receiver / Transmitter (DUART)... 215
SCN 68562 Dual Universal Serial Communications Controller .. 233
SCN 68652 Multi-Protocol Communications Controller 161
SCN 68653 Polynomial Generator Checker (PGC)..... 179
SCN 68661 Enhanced Programmable Communications Interface ... 197
SCN 68681 Dual Asynchronous Receiver / Transmitter (DUART)... 237

Peripheral Circuits for Speech Synthesis

MEA 8000 Voice Synthesizer 259
OM 8000 Sprachausgabe - Platine 273
OM 8010 Speech Adapter Box 275
SAA 1099 Microprocessor Controlled Stereo Sound Generator for Sound Effects and Music Synthesis 277

Package Outlines 295

DEFINITION OF TERMS

Data Sheet Identification	Product Status	Definition
Preview	Formative or In Design	This data sheet contains the design specifications for product development. Specifications may change in any manner without notice.
Advance Information	Sampling or Pre-Production	This data sheet contains advance information and specifications are subject to change without notice.
Preliminary	First Production	This data sheet contains preliminary data and supplementary data will be published at a later date. We reserve the right to make changes at any time without notice in order to improve design and supply the best possible product.
No Identification Noted	Full Production	This data sheet contains final specifications. We reserve the right to make changes at any time without notice in order to improve design and supply the best possible product.

PART NUMBERING SYSTEM

Example: SCN2661AC1N28

S C N 2 6 6 1 A C 1 N 2 8

Microprocessor Division Identifier — Always SC

Process/Power Variation
N = N—Channel
C = C—MOS
B = Bipolar

Basic Part Number

2621A	8031A
2622A	8035A
2636A	8039A
2637A	8040A
2650A	8048A
2651C	8049A
2652A	8050A
2653A	8051A
2661A	80C35
2661B	80C39
2661C	80C40
2670A	80C48
2670B	80C49
2671A	80C50
2672A	68000
2673A	68120
2673B	68121
2674B	68230
2675B	68430
2675C	68681
2681A	

Pin Count
14, 16, 24, 28, 40, etc.

Package
I = Ceramic
N = Plastic

Timing Variation
See appropriate data sheet

Temperature
C = 0°C to +70°C (Commercial)
A = −40°C to +85°C (Automotive)
M = −55°C to +125°C (Military)
P = −20°C to +70°C (Philips)

Peripheral Circuits for CRT-Controllers

Peripheral Circuits for Data Communication

Peripheral Circuits for Speech Synthesis

Package Outlines

Peripheral Circuits for CRT-Controllers

VALVO

DISPLAY CHARACTER AND GRAPHICS GENERATOR (DCGG) SCN2670

DESCRIPTION

The Signetics Display Character and Graphics Generator (DCGG) is a mask-programmable 11,648-bit line select character generator. It contains 128 10X9 characters placed in a 10X16 matrix, and has the capability of shifting certain characters, such as j, y, g, p and q, that normally extend below the baseline. Character shifting, previously requiring additional external circuitry, is now accomplished internally by the DCGG; effectively, the 9 active lines are lowered within the matrix to compensate for the character's position.

Seven bits of an 8-bit address code are used to select 1 of the 128 available characters. The eighth bit functions as a chip enable signal. Each character is defined by a pattern of logic 1s and 0s stored in a 10X9 matrix. When a specific 4-bit binary line address code is applied, a word of 10 parallel bits appears at the output. The lines can be sequentially selected, providing a 9-word sequence of 10 parallel bits per word for each character selected by the address inputs. As the line address inputs are sequentially addressed, the device will automatically place the 10X9 character in 1 of 2 preprogrammed positions on the 16-line matrix with the positions defined by the 4-line address inputs. One or more of the 10 parallel outputs can be used as control signals to selectively enable functions such as half-dot shift, color selection, etc.

The 2670 DCGG includes latches to store the character address and line address data. A control input to inhibit character data output for certain groups of characters is also provided. The 2670 also includes a graphics capability, wherein the 8-bit character code is translated directly into 256 possible user programmable graphic patterns. Thus, the DCGG can generate data for 3884 distinct patterns, of which 128 are defined by the mask programmable ROM. See figure 1 for a typical applications display.

FEATURES

- 128 10X9 matrix characters
- 256 graphic characters
- Optional thin graphics for forms
- Character and line address latches
- Internal descend logic
- 200nsec and 300nsec character select access time versions
- Control character output inhibit logic
- Static operation—no clocks required
- Single 5V power supply
- TTL compatible inputs and outputs

PIN CONFIGURATION

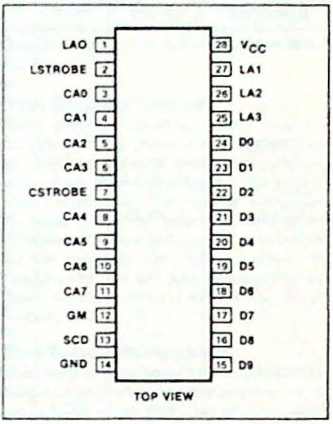

ORDERING CODE

PACKAGES	$V_{CC} = 5V \pm 5\%$, $T_A = 0°C$ to $70°C$	
	$t_{CA} = 200ns$	$t_{CA} = 300ns$
Ceramic DIP	SCN2670*C2I28	SCN2670*C3I28
Plastic DIP	SCN2670*C2N28	SCN2670*C3N28

NOTE
Substitute letter corresponding to standard font for "*" in part number for standard parts. See back of data sheet. Contact sales office for custom ROM patterns.

BLOCK DIAGRAM

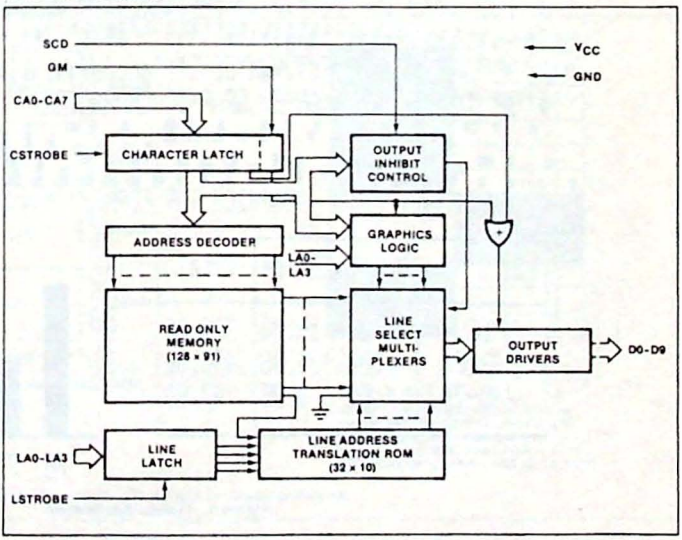

PIN DESIGNATION

MNEMONIC	PIN NO.	TYPE	NAME AND FUNCTION
CA0-CA7	3-6, 8-11	I	**Character Address:** Eight bit code specifies the character or graphic pattern for which matrix data is to be supplied. In character mode (GM=0), CA0 thru CA6 select one of the 128 ROM-defined characters and CA7 is a chip enable. The outputs are active when CA7=1 and are tri-stated when CA7=0. In graphics mode (GM=1), the outputs are active and CA0 thru CA7 select one of 256 possible graphic patterns to be output.
CSTROBE	7	I	**Character Strobe:** Used to store the character address (CA0 thru CA7) and graphics mode (GM) inputs into the character latch. Data is latched on the negative going edge of CSTROBE.
GM	12	I	**Graphics Mode:** GM=0 (low) selects character mode; GM=1 (high) selects graphics mode.
LA0-LA3	1, 25-27	I	**Line Address:** In character mode, selects one of the 16 lines of matrix data for the selected character to appear at the 10 outputs. LA0 is the LSB and LA3 is the MSB. The input codes which cause each of the nine lines of character data to be output are specified as part of the programming data for both non-shifted and shifted fonts. Cycling through the nine specified counts at the LA0 thru LA3 inputs cause successive lines of data to be output on D0 thru D9. The 7 non-specified codes for both non-shifted and shifted characters cause blanks (logic zeros) to be output. In graphics mode, the line address gates the latched graphics data directly to the outputs.
LSTROBE	2	I	**Line Strobe:** Used to store the line address data (LA0 thru LA3) in the line address latch. Data is latched on the negative going edge of LSTROBE.
SCD	13	I	**Selected Character Disable:** In character mode, a high level at this input causes all outputs (regardless of line address) to be blanks (zeros) for characters for which CA6 and CA5 are both 0. A low level input selects normal operation. Inoperative in the graphics mode.
D9-D0	15-24	O	**Data Outputs:** Provide the data for the specified character and line.
V_{CC}	28	I	+5V power supply.
GND	14	I	Ground.

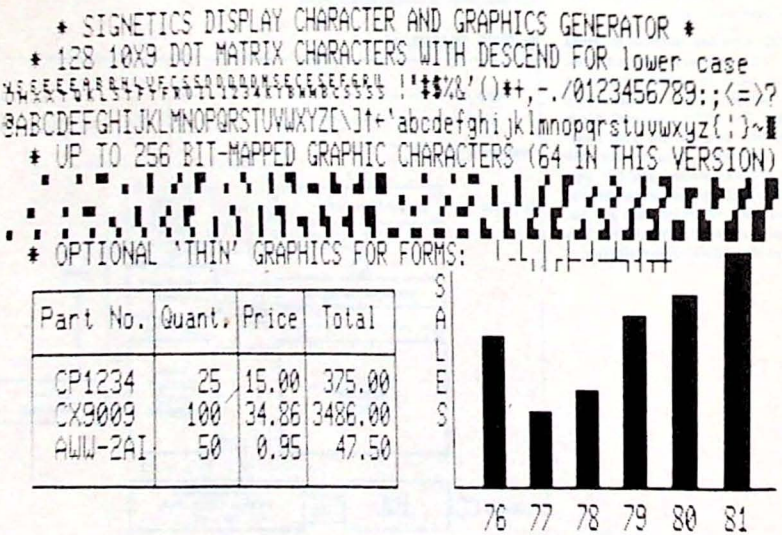

Figure 1. Typical Application

UNCTIONAL DESCRIPTION

ie DCGG consists of nine major sections. me and character codes are strobed into e line and character latches. The charac- r latch outputs are presented to the three urces of data; the ROM through an ad- ess decoder, the graphics logic, and the itput inhibit control. The output inhibit con- ol (together with the SCD input) sup- esses the ROM data for selected charac- r codes. The outputs from the line latch ive the line address translation ROM nich maps the character ROM data onto 9 16 line positions. Finally, the line select ultiplexers route the ROM or graphics data the output drivers on D0 through D9.

haracter Latch

ie character latch is a 9-bit edge triggered ch used to store the character address AA0 thru CA7) and graphics mode (GM) uts. The data is stored on the falling edge CSTROBE. Seven latched addresses AA0 thru CA6) are inputs to the ROM char- ter address decoder. In character mode M=0), CA7 operates as a chip enable. e output drivers are enabled when CA7=1 d are tri-stated when CA7=0. In graphics ode (GM=1), the output drivers are always abled and the CA0 thru CA7 outputs of the ch are used to generate graphic symbols.

haracter Address Decoder

is circuit decodes the 7-bit character ad- ess from the character latch to select one of the 128 character fonts stored in the ROM section of the DCGG.

Read Only Memory

The 11,648-bit ROM stores the fonts for the 128 matrix-defined characters. The data for each character consists of 91 bits. Ninety bits represent the 10×9 matrix and one bit specifies whether the character data is output at the normal (unshifted) lines or at the descended (shifted) lines. The 90 data bit outputs are supplied to the line select multiplexers. The descend control bit is an input to the line address translation ROM.

Graphics Logic

When the GM input is zero (low), the DCGG operates in the character mode. When it is one (high), it operates in the graphics mode. In graphics mode, output data is generated by the graphics logic instead of the ROM. The graphics logic maps the latched character address (CA0 thru CA7) to the outputs (D0 thru D9) as a function of line address (LA0 thru LA3). For any particular line address value, two of the CA bits are output: CA0, CA2, CA4 or CA6 is output on D0 thru D4 and CA1, CA3, CA5 or CA7 is output on D5 thru D9. The outputs are paired: When CA0 is output on D0 thru D4, CA1 is output on D5 thru D9 and likewise for CA2-CA3, CA4-CA5 and CA6-CA7.

A ROM within the graphics logic allows the specific line numbers for which each pair of bits is output to be specified by the customer. Figure 2 illustrates the general format for graphics symbols and an example where (CA7 thru CA0) = H'65'. The outputs from the graphics logic go to the line select multiplexers. The multiplexers route the graphic symbol data to the outputs when GM = 1.

Thin Graphics Option

As a customer specified option, 16 of the possible graphic codes (H'80' to H'8F') may be used to generate the special graphic characters illustrated in figure 3. For each of these characters, the vertical component appears on the D4 output. The horizontal component occurs on L_H which is specified by the customer. The vertical components specified by CA0 and CA2 are output for line addresses zero thru L_H and L_H thru fifteen, respectively.

Line Select Multiplexers

The ten line select multiplexers select ROM data as specified by the line address translation ROM when GM=0, or graphics data when GM=1. The inputs to each multiplexer are the nine line outputs from the ROM, an output from the graphics logic and a logic zero (ground).

Output Drivers

Ten output drivers with 3-state capability serve as buffers between the line select multiplexers and external logic. The 3-state control input to these drivers is supplied from the CA7 latch when GM=0. When GM=1, the outputs are always active.

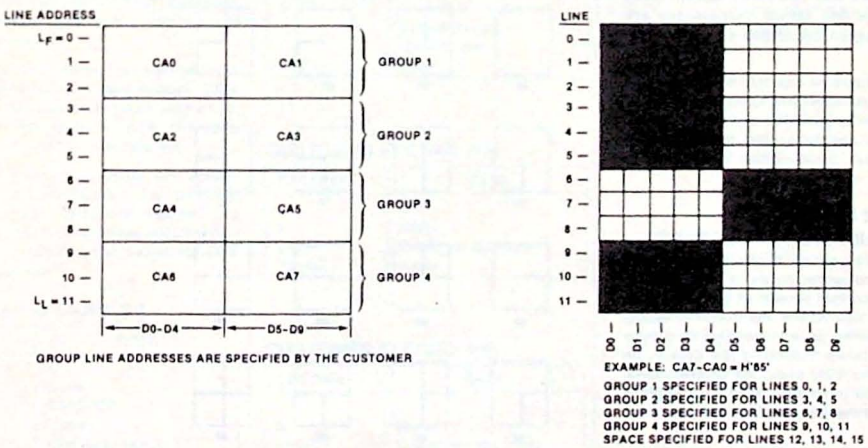

Figure 2. Graphics Symbols — General Format

Output Inhibit Control

The output inhibit control logic operates only if GM=0. It causes the output of the line select multiplexers to be logic zero if the SCD input is high and CA6 and CA5 of the latched character address are 00. If the SCD input is low, normal operation occurs. (This feature is useful in ASCII coded applications to selectively disable character generation for non-displayable characters such as line feed, carriage return, etc.)

Line Address Latch

The line address latch is a 4-bit latch used to store the line address (LA0-LA3). The data is stored on the negative edge of the LSTROBE input.

Line Address Translation ROM

This 32×10 ROM translates the 5-bit code consisting of the 4 outputs from the line address latch and the descend control bit from the ROM into a 1-of-10 code for the line select multiplexers. Programming information provided by the customer specifies the address which selects each line of ROM data for both shifted and non-shifted characters. Thus, there are nine line addresses which select ROM data for unshifted characters and nine addresses for shifted characters. These combinations are usually specified by the customer in either ascending or descending order. For the remaining 14 codes (7 each for unshifted and shifted characters), the translation ROM forces zeros at the outputs of the line select multiplexers.

This circuitry only operates if GM=0. When GM=1, the line select multiplexers are forced to select the outputs from the graphics logic.

Figure 4 shows an example of data outputs where the customer has specified line 14 as the first line for unshifted characters, line 11 as the first line for shifted characters and line address combinations in descending order.

CUSTOM PATTERN PROGRAMMING INSTRUCTIONS

A computer-aided technique utilizing punched computer cards is employed to specify a custom version of the 2670. This technique requires that the customer supply Signetics with a deck of standard 80-column computer cards describing the data to be stored in the ROM array, the programmable line address translation ROM, thin graphics option, and the graphics line font translation ROM.

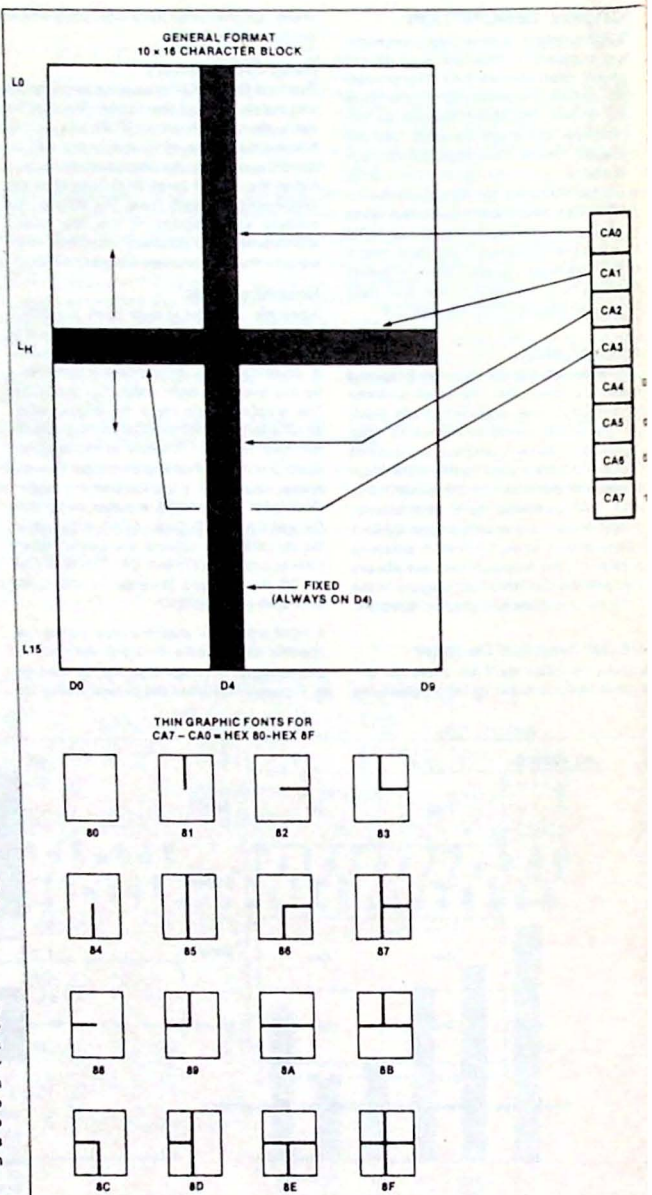

Figure 3. Special Graphic Characters

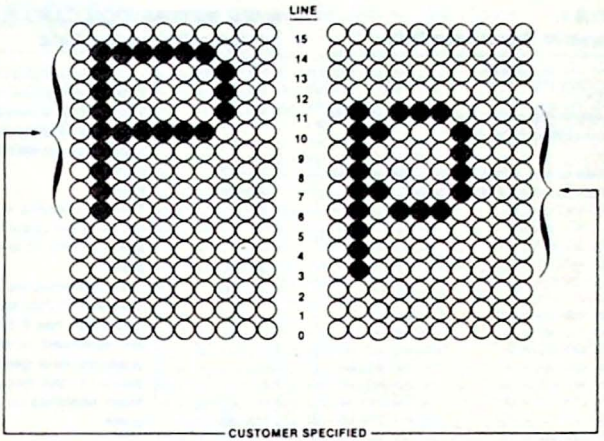

Figure 4. Customer Specified Example

on receipt of a card deck, Signetics will ranslate the card deck to a truth table using he Signetics Computer Aided Design (CAD) acility. The truth table and font diagrams will then be sent to the customer for final approval. On receipt of final approval, Signetics will produce masks and proceed with manufacturing.

Programming information can also be input on TTY 7-level tape as card images. Each card image must be terminated with a carriage return-line feed. An EOT character must signify the end of the data set.

Customer identification cards are always labeled with a C in column 1. For customer identification, four cards are required. Any number of additional customer identification cards are permitted. The following data should be included:

CUSTOMER ID CARD #1

COLUMN	DATA
1	C
2	blank
3-9	2670/CP
10--14	blank
15--70	Company name/ company part number
71--80	blank

CUSTOMER ID CARD #2

COLUMN	DATA
1	C
2	blank
3-70	Customer contact person name/ phone number
71-80	blank

CUSTOMER ID CARD #3

COLUMN	DATA
1	C
2	blank
3-70	Customer address
71-80	blank

CUSTOMER ID CARD #4

COLUMN	DATA
1	C
2	blank
3-70	Customer city, state, zip code
71-80	blank

CUSTOMER ID CARD #5 THRU N

COLUMN	DATA
1	C
2	blank
3-70	Any information desired
71-80	blank

Output Inhibit Control

The output inhibit control logic operates only if GM=0. It causes the output of the line select multiplexers to be logic zero if the SCD input is high and CA6 and CA5 of the latched character address are 00. If the SCD input is low, normal operation occurs. (This feature is useful in ASCII coded applications to selectively disable character generation for non-displayable characters such as line feed, carriage return, etc.)

Line Address Latch

The line address latch is a 4-bit latch used to store the line address (LA0-LA3). The data is stored on the negative edge of the LSTROBE input.

Line Address Translation ROM

This 32X10 ROM translates the 5-bit code consisting of the 4 outputs from the line address latch and the descend control bit from the ROM into a 1-of-10 code for the line select multiplexers. Programming information provided by the customer specifies the address which selects each line of ROM data for both shifted and non-shifted characters. Thus, there are nine line addresses which select ROM data for unshifted characters and nine addresses for shifted characters. These combinations are usually specified by the customer in either ascending or descending order. For the remaining 14 codes (7 each for unshifted and shifted characters), the translation ROM forces zeros at the outputs of the line select multiplexers.

This circuitry only operates if GM=0. When GM=1, the line select multiplexers are forced to select the outputs from the graphics logic.

Figure 4 shows an example of data outputs where the customer has specified line 14 as the first line for unshifted characters, line 11 as the first line for shifted characters and line address combinations in descending order.

CUSTOM PATTERN PROGRAMMING INSTRUCTIONS

A computer-aided technique utilizing punched computer cards is employed to specify a custom version of the 2670. This technique requires that the customer supply Signetics with a deck of standard 80-column computer cards describing the data to be stored in the ROM array, the programmable line address translation ROM, thin graphics option, and the graphics line font translation ROM.

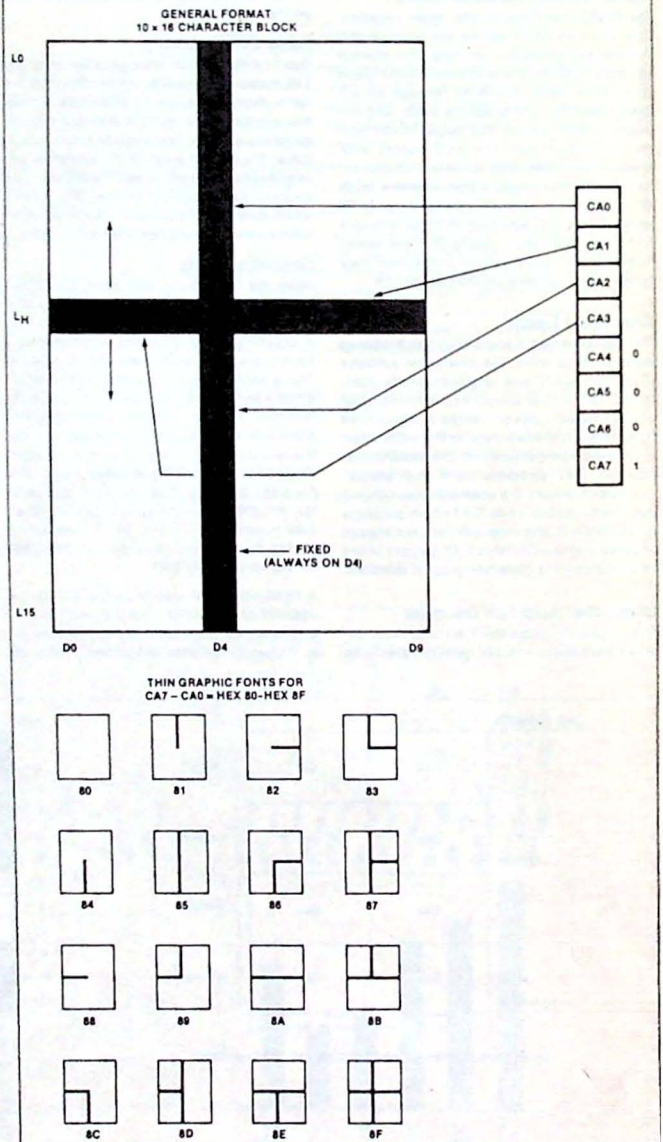

Figure 3. Special Graphic Characters

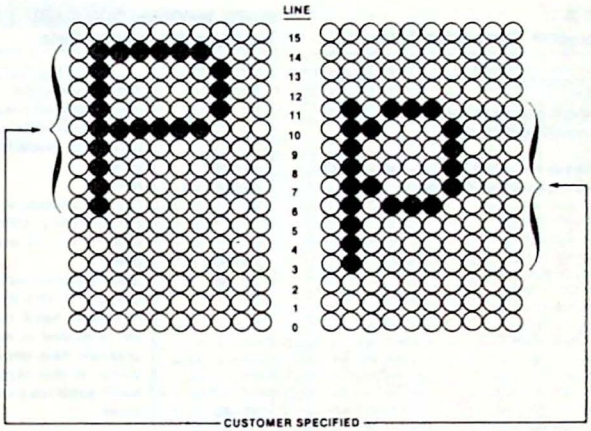

Figure 4. Customer Specified Example

On receipt of a card deck, Signetics will translate the card deck to a truth table using the Signetics Computer Aided Design (CAD) facility. The truth table and font diagrams will then be sent to the customer for final approval. On receipt of final approval, Signetics will produce masks and proceed with manufacturing.

Programming information can also be input on TTY 7-level tape as card images. Each card image must be terminated with a carriage return-line feed. An EOT character must signify the end of the data set.

Customer identification cards are always labeled with a C in column 1. For customer identification, four cards are required. Any number of additional customer identification cards are permitted. The following data should be included:

CUSTOMER ID CARD #1

COLUMN	DATA
1	C
2	blank
3-9	2670/CP
10-14	blank
15-70	Company name/ company part number
71-80	blank

CUSTOMER ID CARD #2

COLUMN	DATA
1	C
2	blank
3-70	Customer contact person name/ phone number
71-80	blank

CUSTOMER ID CARD #3

COLUMN	DATA
1	C
2	blank
3-70	Customer address
71-80	blank

CUSTOMER ID CARD #4

COLUMN	DATA
1	C
2	blank
3-70	Customer city, state, zip code
71-80	blank

CUSTOMER ID CARD #5 THRU N

COLUMN	DATA
1	C
2	blank
3-70	Any information desired
71-80	blank

The following masking information cards must be included:

Mask Information Card #1: Shift and Nonshift Character Translation Data

COLUMN	DATA
1-9	NONSHIFT=
10	Line address in hex which outputs the first font word for nonshifted ROM fonts
11	,
12	Line address in hex which outputs the second font word for nonshifted ROM fonts
13	,
14	third
15	,
16	fourth
17	,
18	fifth
19	,
20	sixth
21	,
22	seventh
23	,
24	eighth
25	,
26	ninth
27-29	blank
30-35	SHIFT=
36	Line address in hex which outputs the first font word for shifted ROM fonts
37	,
38	second
39	,
40	third
41	,
42	fourth
43	,
44	fifth
45	,
46	sixth
47	,
48	seventh
49	,
50	eighth
51	,
52	ninth
53-59	blank
60[1]	0 or 1
61-64	blank
65[2]	0 or 1
66-80	blank

NOTES

1. Column 60 specifies the font truth table horizontal format. 0 specifies left to right printing of D0 thru D9. 1 specifies D9 thru D0.
2. Column 65 specifies the font truth table vertical printout format. 0 specifies top to bottom printing of line address hex 0 thru F. 1 specifies hex F thru 0.

MASK INFORMATION CARD #2: Graphics Translation Data

COLUMN	DATA
1-14	THIN GRAPHICS=
15-17	YES or NO$\not$, where $\not$ = blank. Specifies whether graphics address hex 80 thru hex 8F will select the special thin graphics font.
18-19	blank
20-23	HOR=
24	The line address in hex for the horizontal segments of line graphics fonts. Leave blank if columns 15 thru 17 are NO
25-29	blank
30-45	Graphics group number 1 or 2 or 3 or 4 or blank. Columns 30 thru 45 correspond to line address hex 0 thru hex F respectively. The group number specified in each column will cause the graphics data generated by that group to be output at the corresponding line address. A blank specifies no data for that address.
46-80	blank

MASK INFORMATION CARD #3 THRU #130: ROM Font Data

COLUMN	DATA
1-2	Character address in hex (CA6 thru CA0)*
3	blank
4	S for shifted; N for nonshifted.
5	blank
6-8	Data for first ROM font word in hex (D9 thru D0).
9	blank
10-12	second
13	blank
14-16	third
17	blank
18-20	fourth
21	blank
22-24	fifth
25	blank
26-28	sixth
29	blank
30-32	seventh
33	blank
34-36	eighth
37	blank
38-40	ninth
41-80	blank

NOTE

*A separate card is required for each character address hex 00 thru hex 7F.

Printouts

Signetics will translate the card deck to the following printouts to be submitted to the customer for approval:

- A repeat of all customer information.
- A separate font drawing for each of the 128 ROM characters and 256 graphics fonts. The font drawings are positioned on a 10 × 16 matrix as specified by the customer's translation data.

SAMPLE CARD DECK INPUT

```
SIGNETICS C  2670/CP1000P4  2670 TEST RUN  04/16/79

THIN GRAPHICS*YES  HOR=7     1111222233334444
NONSHIFT*1.2.3.4.4.6.7.8.9.  SHIFT*3.4.5.6.7.8.9.4.8          0    0
00 N 022 026 02A 032 0AA 088 088 088 070          40 N 078 084 082 0CA 08A 072 032 084 078
01 N 01C 002 00C 010 08E 088 0F8 088 088          41 N 010 028 044 082 082 0FE 082 082 082
02 N 01C 002 00C 010 08E 050 020 050 088          42 N 03E 044 084 044 03C 044 084 044 03E
03 N 01E 002 00E 002 39E 050 020 050 088          43 N 078 084 082 002 002 002 002 084 078
04 N 01E 002 00E 002 01E 0F8 020 020 020          44 N 03E 044 084 084 084 084 084 044 03E
05 N 01E 002 00E 002 06E 090 090 0D0 0E0          45 N 0FE 002 002 002 03E 002 002 002 0FE
06 N 00E 012 01E 012 092 050 030 050 090          46 N 0FE 002 002 002 03C 002 002 002 002
07 N 00E 012 00E 012 00E 010 010 010 0F0          47 N 078 084 002 002 002 0E2 082 084 088
08 N 00E 012 00E 012 0CE 010 060 060 070          48 N 082 082 082 082 0FE 082 082 082 082
09 N 012 012 01E 012 012 0F8 020 020 020          49 N 07C 010 010 010 010 010 010 010 07C
0A N 002 002 002 01E 0F0 010 070 010 010          4A N 0C0 040 040 040 040 040 042 042 03C
0B N 022 022 022 014 008 0F8 020 020 020          4B N 082 042 022 012 00A 016 022 042 082
0C N 01E 002 00E 002 0F2 010 070 010 010          4C N 002 002 002 002 002 002 032 002 07E
0D N 01C 002 002 002 07C 090 470 050 090          4D N 082 0C6 0AA 092 092 082 082 082 082
0E N 01C 002 00C 010 06E 090 090 090 060          4E N 082 082 086 08A 092 0A2 0C2 082 082
0F N 01C 002 002 010 0EE 040 040 040 0E0          4F N 038 044 082 082 082 082 082 044 038
10 N 00E 012 012 012 00E 010 010 010 0F0          50 N 07E 082 082 082 07E 002 002 002 002
11 N 00E 012 012 012 04E 060 040 040 0F0          51 N 038 044 082 082 082 092 042 044 0B8
12 N 00E 012 012 012 06E 090 040 020 0F0          52 N 07E 082 082 082 07E 012 022 042 082
13 N 00E 012 012 012 06E 060 060 060 070          53 N 078 084 002 004 038 040 080 042 03C
14 N 00E 012 012 012 04E 060 050 0F8 040          54 N 0FE 010 010 010 010 010 010 010 010
15 N 012 016 01A 012 092 050 030 050 040          55 N 082 082 082 082 082 082 082 044 038
16 N 01C 002 00C 010 06E 050 020 020 020          56 N 082 082 082 044 044 028 028 010 010
17 N 01E 002 00E 002 07E 090 070 040 070          57 N 082 082 082 082 082 092 092 0AA 044
18 N 01C 002 002 002 01C 090 0F0 000 0F0          58 N 082 082 044 028 010 028 044 082 082
19 N 01E 002 00E 002 01E 0B4 008 0A8 084          59 N 082 082 044 028 010 010 010 010 010
1A N 01E 002 00E 010 07E 090 070 090 070          5A N 0FE 080 040 020 010 008 004 002 0FE
1B N 01E 002 00E 002 01E 0E0 010 010 0E0          5B N 07C 004 004 004 004 004 004 004 07C
1C N 01E 002 00E 002 0E2 010 060 080 070          5C N 000 002 004 008 010 020 040 080 000
1D N 01C 002 01A 012 0EC 010 060 080 070          5D N 07C 040 040 040 040 040 040 040 07C
1E N 00E 012 00E 00A 0F2 010 060 080 070          5E N 010 038 054 010 010 010 010 010 010
1F N 012 012 012 012 0EC 010 060 080 070          5F N 000 000 008 004 0FE 004 008 000 000
20 N 000 000 000 000 000 000 000 000 000          60 N 018 018 010 020 000 000 000 000 000
21 N 010 010 010 010 010 000 000 000 010          61 N 000 000 000 03C 040 07C 042 042 0BC
22 N 028 028 028 028 000 000 000 000 000          62 N 002 002 002 03A 046 042 042 046 03A
23 N 028 028 0FE 028 028 028 0FE 028 028          63 N 000 000 000 03C 042 002 002 042 03C
24 N 028 0FC 02A 02A 07C 0A8 0A8 07E 028          64 N 040 040 040 05C 062 042 042 062 05C
25 N 004 08A 044 020 010 008 044 0A2 040          65 N 000 000 000 03C 042 07E 002 002 03C
26 N 00C 012 012 00C 00C 012 0A2 042 0BC          66 N 030 048 008 008 03E 008 008 008 008
27 N 018 018 008 004 000 000 000 000 000          67 S 000 05C 062 042 062 05C 040 042 03C
28 N 020 010 008 008 008 008 CC0 010 020          68 N 002 002 002 03A 046 042 042 042 042
29 N 008 010 020 020 020 020 020 010 008          69 N 000 010 000 018 010 010 010 010 038
2A N 000 010 054 038 0FE 038 054 010 000          6A S 000 060 040 040 040 040 040 044 038
2B N 000 010 010 010 07C 010 010 010 000          6B N 002 002 002 022 012 00A 016 022 042
2C S 000 000 000 000 000 018 018 008 004          6C N 018 010 010 010 010 010 010 010 038
2D N 000 000 000 000 0FE 000 000 000 000          6D N 000 000 000 0AA 096 092 092 092 092
2E N 000 000 000 000 000 000 000 018 018          6E N 000 000 000 03A 046 042 042 042 042
2F N 000 080 040 020 010 008 004 002 000          6F N 000 000 000 03C 042 042 042 042 03C
30 N 038 044 0C2 0A2 092 08A 086 044 038          70 S 000 03A 046 042 046 03A 002 002 002
31 N 010 018 014 010 010 010 010 010 07C          71 S 000 05C 062 042 062 05C 040 040 040
32 N 07C 082 080 040 038 004 002 002 0FE          72 N 000 000 000 03A 046 002 002 002 002
33 N 07C 082 080 080 070 080 080 082 07C          73 N 000 000 000 03C 042 00C 030 042 03C
34 N 040 060 050 048 044 0FE 040 040 040          74 N 000 008 008 01C 008 008 008 048 030
35 N 0FE 002 002 002 07E 080 080 082 07C          75 N 000 000 000 042 042 042 042 062 05C
36 N 078 084 002 002 07A 086 082 082 07C          76 N 000 000 000 044 044 044 044 028 010
37 N 0FE 080 080 040 020 010 008 004 002          77 N 000 000 000 082 082 092 092 092 06C
38 N 07C 082 082 044 038 044 082 082 07C          78 N 000 000 000 042 024 018 018 024 042
39 N 07C 082 082 0C2 0BC 080 080 042 03C          79 S 000 042 042 042 062 05C 040 042 03C
3A N 000 000 000 018 018 000 000 018 018          7A N 000 000 000 07E 020 010 008 004 07E
3B S 000 018 018 000 000 018 018 008 004          7B N 030 008 008 008 004 008 008 008 030
3C N 020 010 008 004 002 004 008 010 020          7C N 010 010 010 000 000 000 010 010 010
3D N 000 000 000 0FE 000 000 0FE 000 000          7D N 018 020 020 020 040 020 020 020 018
3E N 008 010 020 040 080 040 020 010 008          7E N 000 000 000 08C 092 060 000 000 000
3F N 07C 082 082 080 060 010 010 000 010          7F N 0AA 054 0AA 054 0AA 054 0AA 054 0AA
```

ABSOLUTE MAXIMUM RATINGS[1]

PARAMETER	RATING	UNIT
Supply voltage	6.0	V
Operating ambient temperature[2]	0 to +70	°C
Storage temperature	−65 to +150	°C
All voltages with respect to ground[3]	−0.3 to +6.0	V

NOTES
1. Stresses above those listed under Absolute Maximum Ratings may cause permanent damage to the device. This is a stress rating only and functional operation of the device at these or any other condition above those indicated in the operation section of this specification is not implied.
2. For operating at elevated temperatures, the device must be derated based on +150°C maximum junction temperature and thermal resistance of 60°C/W junction to ambient (ceramic package).
3. This product includes circuitry specifically designed for the protection of its internal devices from the damaging effects of excessive static charge. Nonetheless it is suggested that conventional precautions be taken to avoid applying any voltages larger than the maxima.

DC ELECTRICAL CHARACTERISTICS T_A = 0°C to 70°C, V_{CC} = 5.0V ± 5% [1,2,3]

PARAMETER		TEST CONDITIONS	LIMITS			UNIT
			Min	Typ	Max	
V_{IL}	Input low voltage		0		0.8	V
V_{IH}	Input high voltage		2.0		V_{CC}	V
V_{OL}	Output low voltage	I_O = 1.6mA	0		0.4	V
V_{OH}	Output high voltage	I_O = −100μA	2.4		V_{CC}	V
I_{IL}	Input leakage current	V_{IN} = 0 to 4.25V			10	μA
I_{OL}	Output leakage current	V_O = 0.4 to 4V			± 10	μA
I_{CC}	Supply current	V_{CC} = 5.25V		35	80	mA
C_{IN}	Input capacitance	All other pins grounded			10	pF
C_{OUT}	Output capacitance				15	pF

AC CHARACTERISTICS T_A = 0°C to +70°C, V_{CC} = 5V ± 5% [1,2,3,4]

PARAMETER		LIMITS				Unit
		300ns		200ns		
		Min	Max	Min	Max	
t_{WS}	Strobe pulse width	100		100		ns
t_{LAS}	Line address setup	50		50		ns
t_{LAH}	Line address hold	25		25		ns
t_{CAS}	Character address setup	25		15		ns
t_{CAH}	Character address hold	25		15		ns
t_{CA}	Character select access		300		200	ns
t_{LA}	Line select access		500		350	ns
t_{SEL}	Chip select delay		250		150	ns
t_{DES}	Chip deselect delay		200		125	ns
t_{SC}	Special character blank/unblank time		300		200	ns

NOTES
1. Parameters are valid over operating temperature range unless otherwise specified.
2. All voltage measurements are referenced to ground. All time measurements are at the 0.8V or 2.0V level for inputs and outputs. Input levels are 0V and 2.4V.
3. Typical values are at +25°C, typical supply voltages and typical processing parameters.
4. Test conditions: C_L = 100pF and 1 TTL load.

TIMING DIAGRAMS

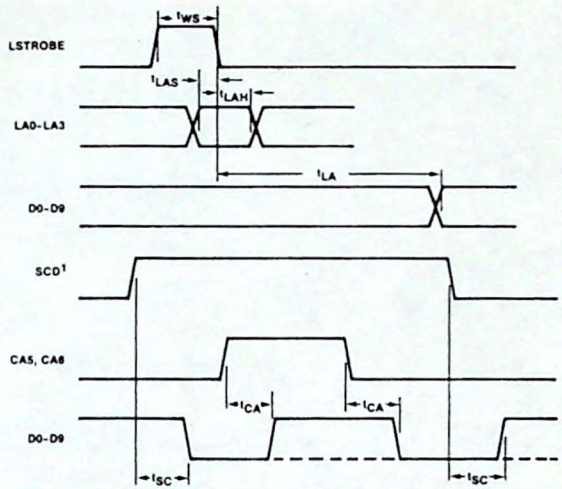

NOTE
1. WHEN GM = 1, SCD INPUT IS INACTIVE

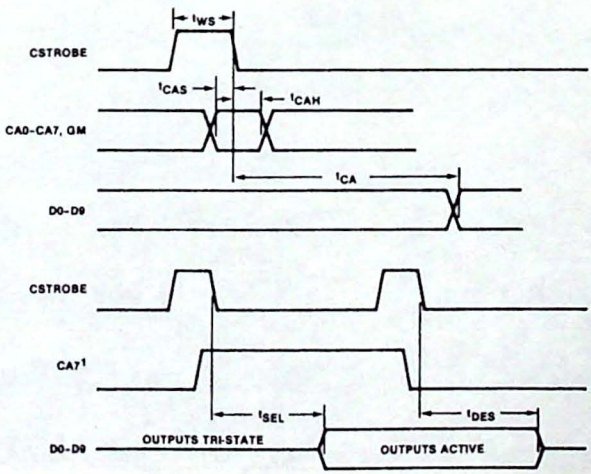

NOTE
1. CA7 OPERATES AS OUTPUT ENABLE ONLY IN CHARACTER MODE (GM = 0)

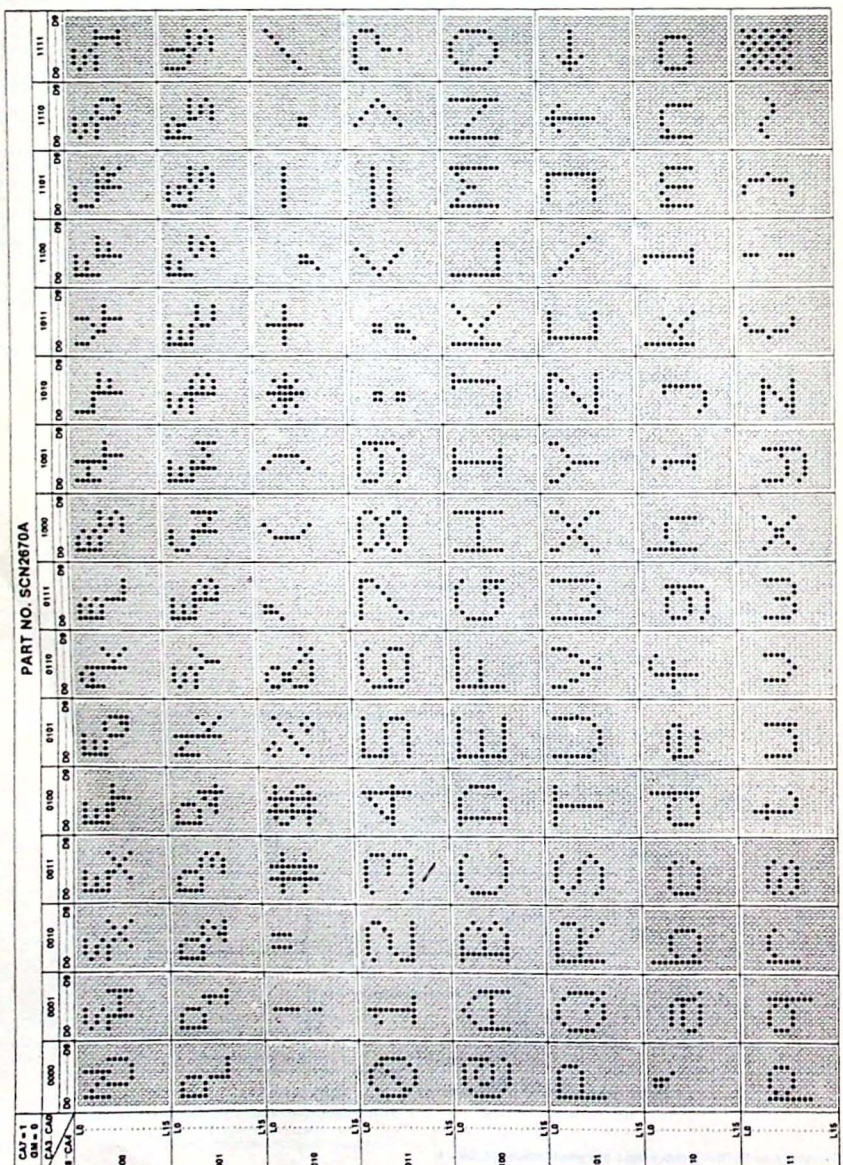
PART NO. SCN2670A
CA7 = 1
CM = 0
CA3 CA6
CM CA4
LO
L15
000
001
010
011
100
101
110
111
0000
0001
0010
0011
0100
0101
0110
0111
1000
1001
1010
1011
1100
1101
1110
1111
D0
D1
D2
D3
D4
D5
D6
D7

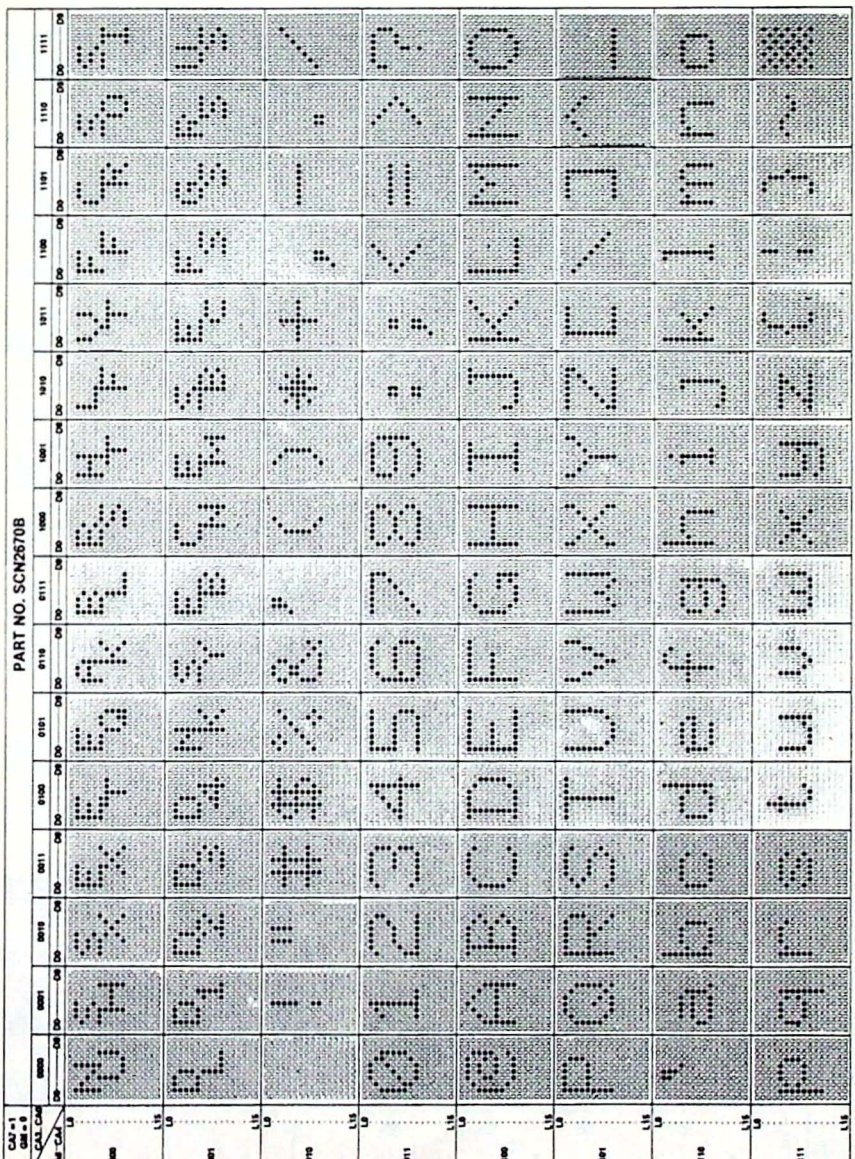
PART NO. SCN2670B
CAD = 1
GM = 0
CA3 CA2
CA1 CA0
0000
0001
0010
0011
0100
0101
0110
0111
1000
1001
1010
1011
1100
1101
1110
1111
L0
L15
00
01
02
03
10
11

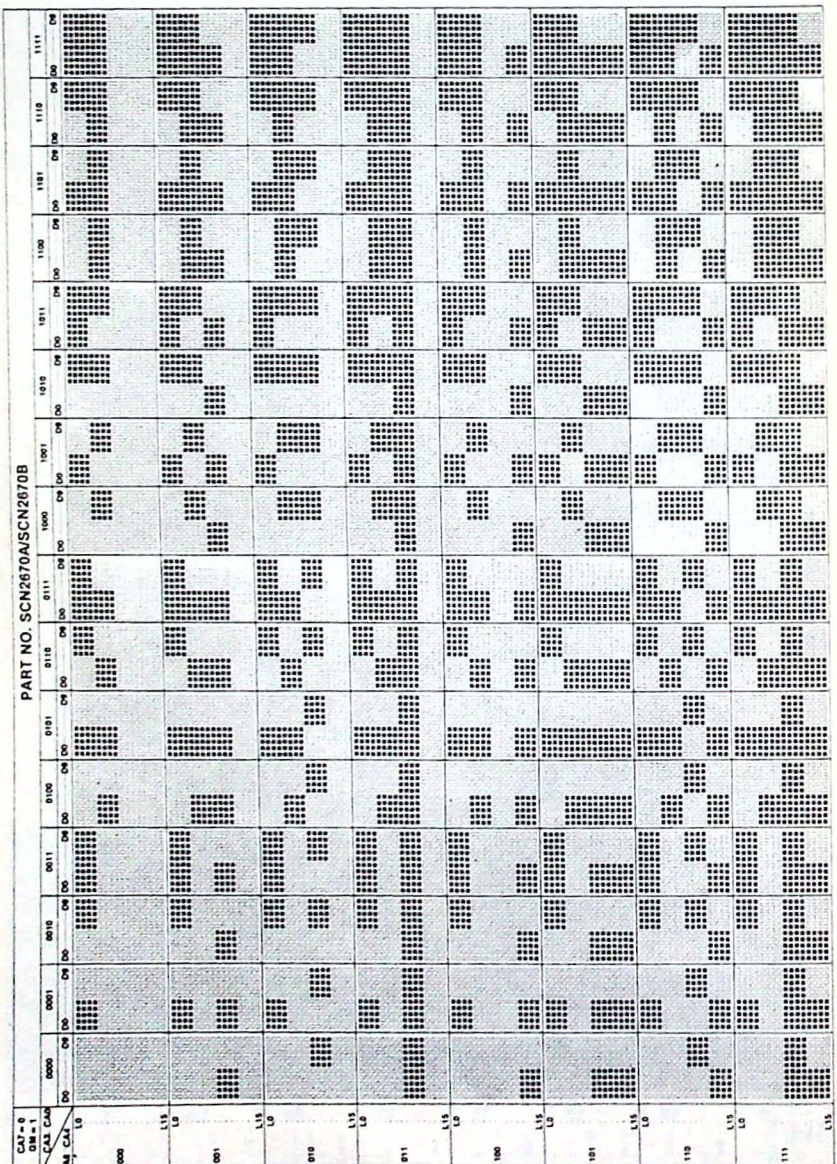
PART NO. SCN2670A/SCN2670B
CAJ = 0
DM = 1
CA3 CA2
CA1 CA0
0000
0001
0010
0011
0100
0101
0110
0111
1000
1001
1010
1011
1100
1101
1110
1111
D7 D6 D5 D4 D3 D2 D1 D0
000
001
010
011
100
101
110
111
L0
L15

VALVO

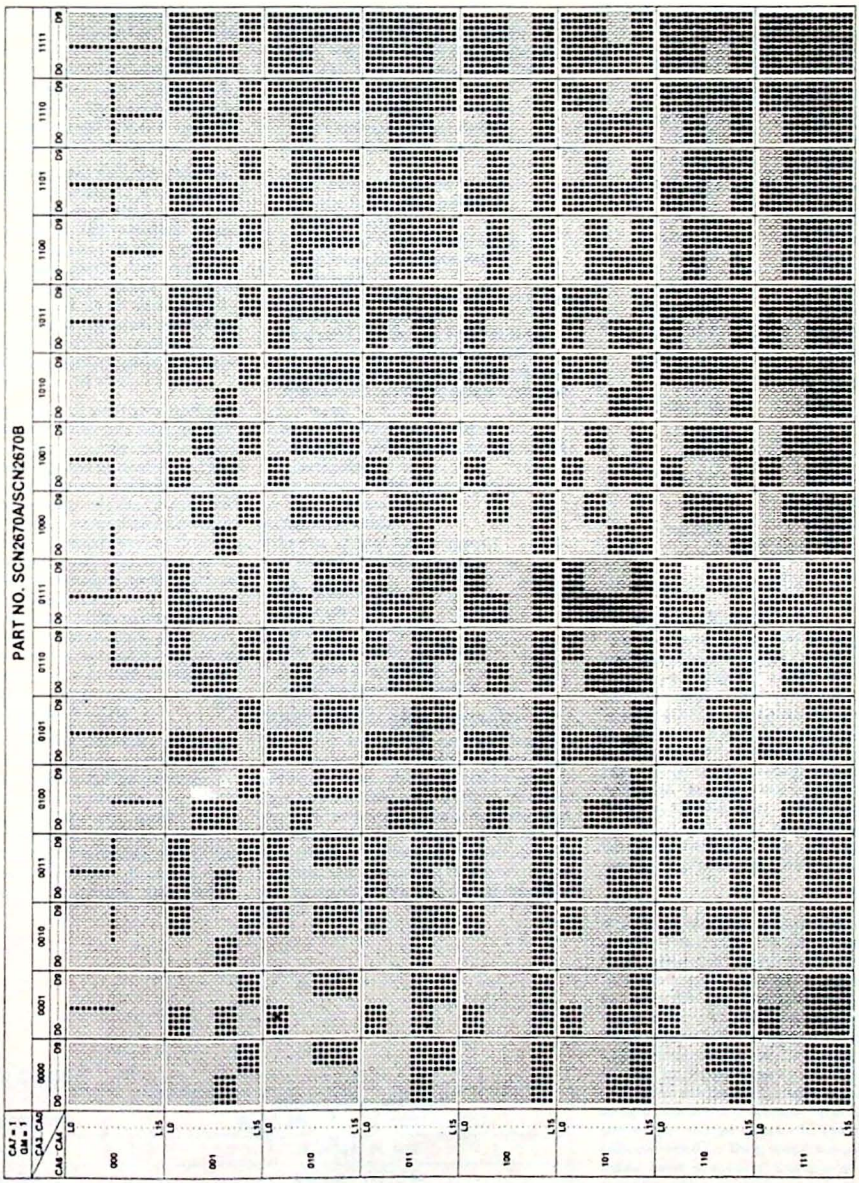
PART NO. SCN2670A/SCN2670B
CA7 = 1
GM = 1
CA3 CA2
CA6 CA4
0000
0001
0010
0011
0100
0101
0110
0111
1000
1001
1010
1011
1100
1101
1110
1111
000
001
010
011
100
101
110
111
D0
D6
L0
L15

VALVO

PROGRAMMABLE KEYBOARD AND COMM CONTROLLER (PKCC) SCN2671

DESCRIPTION

The Signetics 2671 Programmable Keyboard and Communications Controller (PKCC) is an MOS LSI device which provides a versatile keyboard encoder and an independent full duplex asynchronous communications controller. It is intended for use in microprocessor based systems and provides an eight bit data bus interface.

The keyboard encoder handles the scanning, debounce, and encoding of a keyboard matrix with a maximum of 128 keys. It provides four levels of key encoding corresponding to the separate SHIFT and CONTROL input combinations. Four keyboard rollover modes can be programmed including provisions for up to 16 latched keys. Control outputs are provided for interfacing with contact or capacitive keyboards. An eight bit keyboard status register provides status information to the CPU.

The receiver section of the communications controller accepts serial data from the RxD pin and converts it to parallel data characters. Simultaneously, the transmitter section accepts parallel data from the data bus and outputs serialized data onto the TxD pin. Received data is checked for parity and framing errors, and break conditions are flagged. Character lengths can be programmed as 5, 6, 7, or 8 bits not including parity, start or stop bits. An internal baud rate generator (BRG) with 16 divider ratios can be used to derive the receive and/or transmit clocks. The BRG can accept an external clock or operate directly from a crystal. An eight bit communications status register provides status information to the CPU.

The PKCC has an interrupt mask register to selectively enable certain keyboard and communications status bits to generate interrupts. Priority encoded interrupt vectoring is available. Upon receipt of an interrupt acknowledge, an interrupt vector will be output on D0-D7 reflecting the source of the interrupt. The interrupt source can also be read from an interrupt status register.

FEATURES

- **Keyboard interface**
  - **Contact or capacitive keyboard**
  - **Up to 128 keys on an 8 X 16 matrix**
  - **Encoded or unencoded operation**
  - **Four code levels per key**
  - **Latched key option—separate depress and release codes**
  - **Programmable scan rate and debounce time**
  - **Programmable rollover modes**
  - **Programmable auto-repeat for selected keys**
  - **Tone output—two frequencies**
- **Asynchronous communication interface**
  - **Internal baud rate generator—16 rates**
  - **Full duplex operation**
  - **Detection of start and end of break**
  - **Programmable break generation**
  - **Programmable character parameters**
  - **Auto-echo and maintenance loopback modes**
- **Polled or interrupt operation**
- **Interrupt priority controller and vector generator**
- **Operates directly from crystal or external clocks**
- **TTL compatible**
- **Single +5 volt power supply**
- **40 pin dual in-line package**

APPLICATIONS

- **CRT terminals**
- **Hard copy terminals**
- **Word processing systems**
- **Data entry terminals**
- **Small business computers**

FUNCTIONAL DESCRIPTION

The PKCC consists of six major sections (see block diagram). These are the transmitter, receiver, timing, operation control, keyboard encoder, and a priority encoded interrupt control unit. These sections communicate with each other via an internal data bus and an internal control bus. The internal data bus interfaces to the microprocessor data bus via a bidirectional data bus buffer.

PIN CONFIGURATION

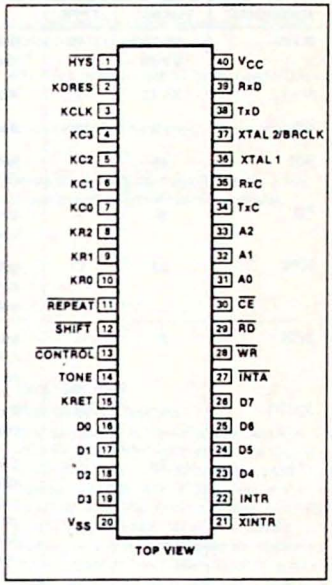

Operation Control

This functional block stores configuration and operation commands from the CPU and generates appropriate signals to various internal sections to control the overall device operation. It contains read and write circuits to permit communications with the microprocessor via the data bus and contains mode registers KMR and CMR, the command decoder, and status registers KSR and CSR. Details of operating modes and status information are presented in the Operation section of this data sheet. The register addressing is specified in table 1.

Timing

The PKCC contains a baud rate generator (BRG) which is programmable to accept external transmit or receive clocks or to divide an external clock to perform data communications. The unit can generate 16 baud rates, any of which can be selected for full duplex operation. The external clock to the baud rate generator can be applied directly to the XTAL2 input (see figure 21) or can be generated internally by connecting a crystal across the XTAL1, XTAL2 input pins. The clock input is also utilized by the keyboard encoder section. Thus, a clock must be provided even if external transmitter and receiver clocks are used.

ORDERING CODE

PACKAGES	COMMERCIAL RANGES V_{CC} = 5V ±5%, T_A = 0°C to 70°C
Ceramic DIP	SCN2671AC1I40
Plastic DIP	SCN2671AC1N40

PIN DESIGNATION

MNEMONIC	PIN NO.	TYPE	NAME AND FUNCTION
D0-D7	16-19, 23-26	I/O	**Data Bus:** 8-bit three-state bidirectional data bus. All data, command and status transfers are made using this bus. D0 is the least significant bit; D7 is the most significant bit.
A0-A2	31-33	I	**Address Lines:** Used to select internal PKCC registers or commands.
$\overline{RD}$	29	I	**Read Strobe:** When low, gates the selected PKCC register onto the data bus if $\overline{CE}$ is also low.
$\overline{WR}$	28	I	**Write Strobe:** When low, gates the contents of the data bus into the selected PKCC register if $\overline{CE}$ is also low.
$\overline{CE}$	30	I	**Chip Enable:** When high, places the D0-D7 output drivers in a three-state condition. If $\overline{CE}$ is low, data transfers are enabled in conjuction with the $\overline{RD}$ and $\overline{WR}$ inputs.
$\overline{INTR}$	22	O	**Interrupt Request:** Several conditions may be programmed to request an interrupt to the CPU. It is an active low open-drain output. This pin will be inactive after power on reset or a master reset command.
$\overline{INTA}$	27	I	**Interrupt Acknowledge:** Used to indicate that an interrupt request has been accepted by the CPU. When $\overline{INTA}$ goes low, the PKCC outputs an 8-bit address vector on D0-D7 corresponding to the highest priority interrupt currently active.
$\overline{XINTR}$	21	I	**External Interrupt:** An active low external interrupt input to the PKCC interrupt priority resolver.
TxC	34	I/O	**Transmitter Clock:** The function of this pin depends on bit 7 of the baud rate control register (BRR7). If external transmitter clock is selected (BRR7 = 0), it is an input for the transmitter clock. If internal transmitter clock is selected (BRR7 = 1), this pin is an output which is a multiple of the actual baud rate (1X, 16X) as selected by BRR5. The data is transmitted on the falling edge of TxC. It is an input after power on and after master reset or communications reset commands.
RxC	35	I/O	**Receiver Clock:** The function of this pin depends on BRR6. If external receiver clock is selected (BRR6 = 0), it is an input for the receiver clock. If internal receiver clock is selected (BRR6 = 1), this pin is an output which is a multiple of the actual baud rate (1X, 16X) as selected by BRR4. The received data is sampled on the rising edge of RxC. It is an input after power on and after master reset or communications reset commands.
TxD	38	O	**Transmitter Data:** This output is the transmitted serial data; the least significant bit is transmitted first. This pin is high after power on reset or a reset command that affects the transmitter.
RxD	39	I	**Receiver Data:** This input is the serial data input to the receiver. The least significant bit is received first.
XTAL1 XTAL2/BRCLK	36,37	I	**Connections for Crystal:** Provides an on-chip clock generator for the internal baud rate generator and the keyboard interface logic. If an external clock is provided, use XTAL2 as the clock input. See figures 20 and 21. All timing parameters such as keyboard scan time, tone frequency, and baud rate assume a clock input at the specified BRG input frequency. If this frequency is different, the timing parameters will vary proportionately.
KR0-KR2	10-8	O	**Keyboard Row Scan:** Decoded externally; selects one of eight rows.
KC0-KC3	7-4	O	**Keyboard Column Scan:** Decoded externally; selects one of 16 columns.
KRET	15	I	**Key Return:** An active high level indicates that the key being scanned is closed.
$\overline{SHIFT}$	12	I	**SHIFT Key:** Active low input from the SHIFT key. The combination of $\overline{SHIFT}$ and $\overline{CONTROL}$ inputs select one of four possible codes from the internal key encoding ROM.
$\overline{CONTROL}$	13	I	**CONTROL Key:** Active low input from the CONTROL key. The combination of $\overline{SHIFT}$ and $\overline{CONTROL}$ inputs select one of four possible codes from the internal key encoding ROM.

PIN DESIGNATION (Cont.)

$\overline{REPEAT}$	11	I	**REPEAT Key:** Active low input from the $\overline{REPEAT}$ key. Causes the key depression currently active to be repeated at a rate of approximately 15 times per second.
KCLK	3	O	**Keyboard Clock:** High frequency (approximately 400 kHz) output used to scan capacitive keyboards.
KDRES	2	O	**Key Detect Reset:** Resets the analog detector before scanning a key. Used for capacitive keyboards.
$\overline{HYS}$	1	O	**Hysteresis Output:** Sent to the analog detector for capacitive keyboard applications. A low indicates the key currently being scanned has been recognized on previous scan cycles.
TONE	14	O	**Square Wave Output:** Used for tone generation.
V_{CC}	40	I	+5V power supply.
V_{SS}	20	I	Ground.

Receiver

The receiver accepts serial data on the RxD pin, converts this serial input to parallel format, checks for break conditions, framing and parity errors, and loads an "assembled" character in the receive holding register for access by the CPU.

Transmitter

The transmitter accepts parallel data loaded by the CPU into the transmit holding register and converts it to a serial bit stream framed by the start bit, calculated parity bit (if specified), and stop bit(s). The composite serial stream of data is transmitted on the TxD output pin.

Keyboard Encoder

The keyboard encoder provides encoded scanning signals for a matrix keyboard. Key depressions are detected on the KRET input. The debounced and verified key codes (or matrix addresses) are loaded into the key holding register for access by the CPU. Figures 1 and 2 illustrate the PKCC interface to contact and capacitive keyboards, respectively.

Interrupt Control

The interrupt controller unit contains a software programmable interrupt mask register which selectively enables status conditions from the keyboard encoder and communication controller to generate interrupts. The interrupts are priority encoded and individually generate an eight bit vector which is output on the data bus in response to a CPU interrupt acknowledge on the $\overline{INTA}$ input pin.

Table 1 2671 REGISTER ADDRESSING

$\overline{CE}$	A2	A1	A0	$\overline{RD}/\overline{WR}$	FUNCTION
1	X	X	X	X	Three-state data bus
0	0	0	0	$\overline{WR}$	Reset command (see table 6)
0	0	0	0	$\overline{RD}$	Read interrupt status register (ISR)
0	0	0	1	$\overline{RD}$, $\overline{WR}$	Read/write communications mode register (CMR)
0	0	1	0	$\overline{WR}$	Write transmit holding register (TxHR)
0	0	1	0	$\overline{RD}$	Read receiver holding register (RxHR)
0	0	1	1	$\overline{WR}$	Write baud rate mode register (BRR)
0	0	1	1	$\overline{RD}$	Read communications status register (CSR)
0	1	0	0	$\overline{RD}$,$\overline{WR}$	Read/write interrupt mask register (IMR)
0	1	0	1	$\overline{RD}$, $\overline{WR}$	Read/write keyboard mode register (KMR)
0	1	1	0	$\overline{RD}$	Read keyboard holding register (KHR)
0	1	1	1	$\overline{RD}$	Read keyboard status register (KSR)
0	1	1	1	$\overline{WR}$	Miscellaneous commands (see description)

NOTE
X = don't care.

OPERATION

Keyboard Encoder

The keyboard is continuously scanned by KC0-KC3 and KR0-KR2 which are decoded externally to handle 128 possible keys (see figures 1 and 2). KC0-KC3 select one of 16 columns and KR0-KR2 multiplex the eight row return lines into the KRET pin. Debouncing is accomplished by remembering a 1 state at the KRET pin when a key is being addressed and verifying it one scan later. Once the key is verified, a key code is loaded into the keyboard data register (KDR). If the keyboard holding register (KHR) is empty, the contents of the KDR will be transferred to the KHR immediately; if the KHR is full (i.e., the CPU has not read the previous key code), the transfer will be held off until the KHR is read. The data transfer to the KHR causes keyboard data ready (KRDY) to be set in the keyboard status register.

For capacitive keyboards, the high frequency output KCLK can be used to gate the column scan to the keyboard (see figure 2). The key detector reset (KDRES) output resets the analog detector prior to scanning each key location. The output from the analog multiplexer is sensed and then latched in the analog detector. The $\overline{HYS}$ output controls the sense level. A 0 will lower the sense level causing hysteresis, and a 1 will raise the sense level with no hysteresis.

The $\overline{REPEAT}$ input enables the keyboard logic to recognize any key repeatedly, 15 times per second. Additionally, certain keys can be programmed to repeat automatically if depressed for more than one-half second.

A square wave is output on the TONE pin when the CPU issues a ring tone command to the PKCC.

BLOCK DIAGRAM

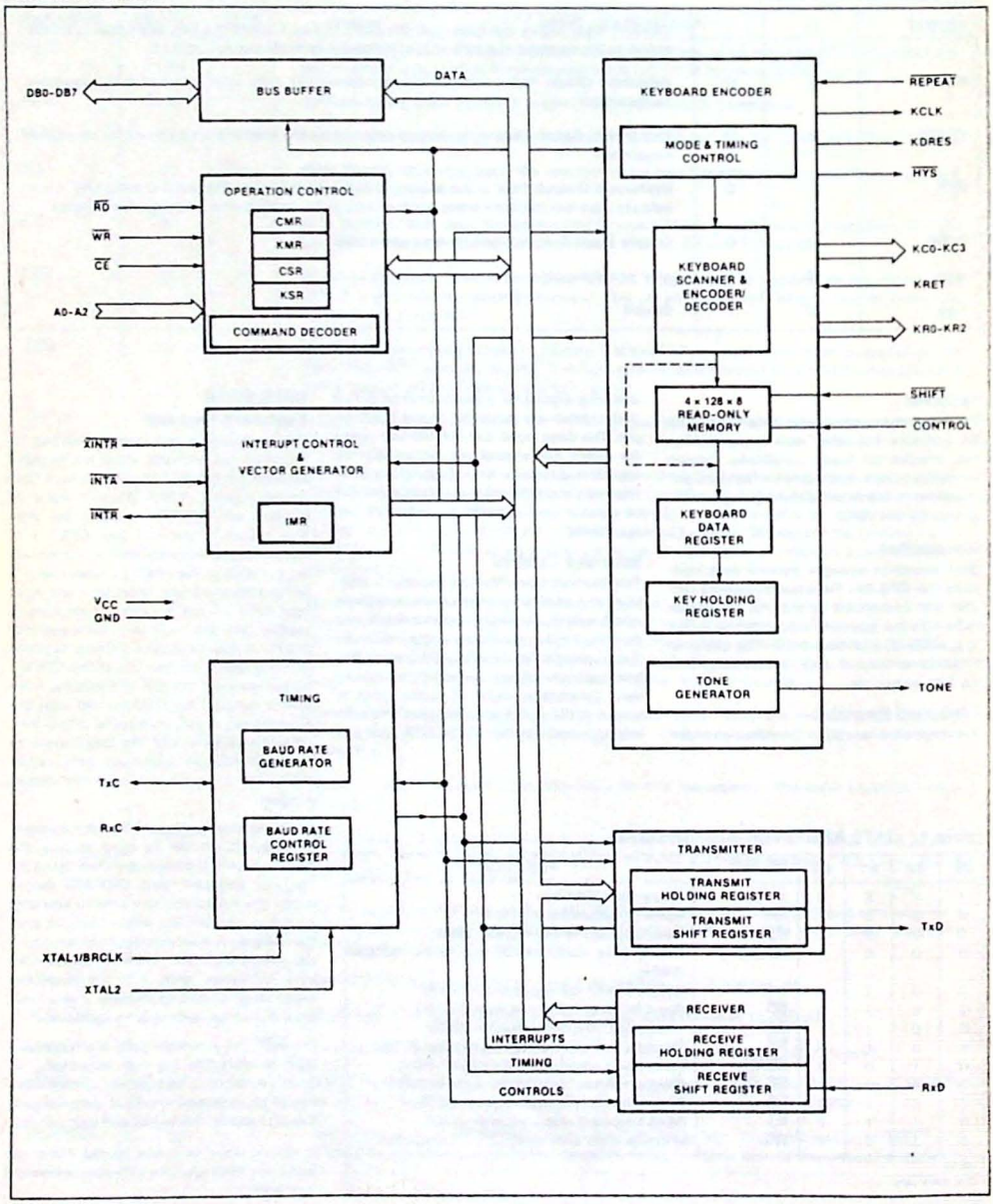

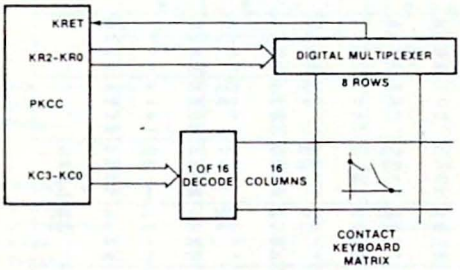

Figure 1. Contact Keyboard Interface

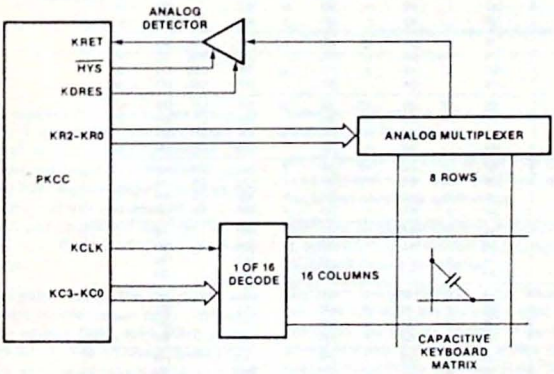

Figure 2. Capacitive Keyboard Interface

Keyboard Mode Register

Operating modes are selected by programming the keyboard mode register (KMR), whose format is illustrated in figure 3.

Bit KMR7 is used for testing the device. For normal operation, this bit should always be written to a 0.

Bits KMR6-KMR5 select the rollover modes for keyboard processing:

N-key Rollover: In this mode, the code corresponding to each key depression is loaded into the KDR as soon as that key is debounced, independent of the release of other keys. Two or more closures occurring within one scan cycle are considered to be simultaneous, which will set keyboard error in the keyboard status register (KSR1). As soon as the keyboard holding register is empty, the code in the KDR is transferred to the KHR and the KRDY status bit is set (KSR0).

N-Key Rollover With Latched Keys: This mode is the same as regular N-key rollover, except that the keys which are assigned to row 0 of the keyboard matrix (KR2-KR0 = 000) produce a code both when depressed and when released. The codes are independent of the states of the inputs at $\overline{\text{SHIFT}}$ and $\overline{\text{CONTROL}}$. If one or more of the latched keys are depressed when the keyboard is enabled (after a keyboard reset), the corresponding codes will be sent out as the keys are scanned and debounced. Note that simultaneous latched keys will not set KERR (KSR1) and that latched keys will not be auto-repeat and will not be affected by the $\overline{\text{REPEAT}}$ input.

Two-Key Rollover: The first key code is loaded into the KDR immediately and the second code is loaded only after the first key is released. Simultaneous keys will set KERR (KSR1). If three or more keys remain closed at any given time, the KERR bit will also be set. All keys must then be released before the next KRET will be processed.

Two-Key Inhibit: All keys must be released between keystrokes; otherwise, KERR (KSR1) will be set.

Bit KMR4 specifies the key encoding mode. Each key is assigned four 8-bit codes, corresponding to the states of the $\overline{\text{SHIFT}}$ and $\overline{\text{CONTROL}}$ inputs. If the encoded mode is programmed, the row/column address of the detected key is used to load one of the four key codes into the KDR. See table 2 for key code assignments. If the non-encoded mode is programmed, the row/column address is loaded directly into the KDR with the following format:

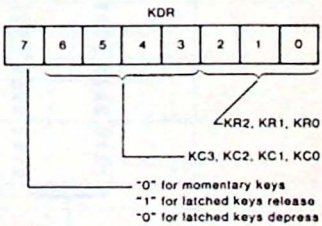

Table 2 STANDARD KEY CODES (HEX)

COLUMN (KC3-KC0)	ROW (KR2-KR0) 0	1	2		3		4		5		6		7	
0	E0	C0	1B	ESC	09	HT	1F	US	1A	SUB	30	0	2B	+
	F0	D0	1B	ESC	09	HT	1F	US	1A	SUB	30	0	3B	:
	E0	C0	1B	ESC	09	* HT	1F	US	5A	Z	30	0	2B	+
	F0	D0	1B	ESC	09	* HT	1F	US	7A	z	30	0	3B	:
1	E1	C1	21	!	11	DC1	01	SOH	18	CAN	3D	=	2A	*
	F1	D1	31	1	11	DC1	01	SOH	18	CAN	2D	—	3A	:
	E1	C1	21	!	51	Q	41	A	58	X	3D	* =	2A	*
	F1	D1	31	1	71	q	61	a	78	x	2D	* —	3A	:
2	E2	C2	22	"	17	ETB	13	DC3	03	ETX	1E	RS	1F	US
	F2	D2	32	2	17	ETB	13	DC3	03	ETX	1E	RS	1F	US
	E2	C2	22	"	57	W	53	S	43	C	7E	~	7F	* DEL
	F2	D2	32	2	77	w	73	s	63	c	5E	↑	5F	* —
3	E3	C3	23	#	05	ENQ	04	EOT	16	SYN	1C	FS	1B	ESC
	F3	D3	33	3	05	ENQ	04	EOT	16	SYN	1C	FS	1B	ESC
	E3	C3	23	#	45	E	44	D	56	V	7C	¦	7B	{
	F3	D3	33	3	65	e	64	d	76	v	5C	\	5B	[
4	E4	C4	24	$	12	DC2	06	ACK	02	STX	08	BS	1D	GS
	F4	D4	34	4	12	DC2	06	ACK	02	STX	08	BS	1D	GS
	E4	C4	24	$	52	R	46	F	42	B	08	* BS	7D	}
	F4	D4	34	4	72	r	66	f	62	b	08	* BS	5D	}
5	E5	C5	25	%	14	DC4	07	BEL	0E	SO	10	DLE	08	BS
	F5	D5	35	5	14	DC4	07	BEL	0E	SO	10	DLE	08	BS
	E5	C5	25	%	54	T	47	G	4E	N	50	P	08	BS
	F5	D5	35	5	74	t	67	g	6E	n	70	p	08	* BS
6	E6	C6	26	&	19	EM	08	BS	0D	CR	00	NUL	09	HT
	F6	D6	36	6	19	EM	08	BS	0D	CR	00	NUL	09	HT
	E6	C6	26	&	59	Y	48	H	4D	M	60	`	09	* HT
	F6	D6	36	6	79	y	68	h	6D	m	40	@	09	* HT
7	E7	C7	27	'	15	NAK	0A	LF	3C	<	7F	DEL	20	SP
	F7	D7	37	7	15	NAK	0A	LF	2C	,	7F	DEL	20	SP
	E7	C7	27	'	55	U	4A	J	3C	<	7F	DEL	20	* SP
	F7	D7	37	7	75	u	6A	j	2C	,	7F	DEL	20	* SP
8	E8	C8	28	(	09	HT	0B	VT	3E	>	0A	LF	0B	VT
	F8	D8	38	8	09	HT	0B	VT	2E	.	0A	LF	0B	VT
	E8	C8	28	(	49	I	4B	K	3E	>	0A	LF	0B	* VT
	F8	D8	38	8	69	i	6B	k	2E	.	0A	LF	0B	* VT
9	E9	C9	29	)	0F	SI	0C	FF	3F	?	0D	CR	0A	LF
	F9	D9	39	9	0F	SI	0C	FF	2F	/	0D	CR	0A	LF
	E9	C9	29	)	4F	O	4C	L	3F	?	0D	CR	0A	* LF
	F9	D9	39	9	6F	o	6C	l	2F	/	0D	CR	0A	* LF
A	EA	CA	37	7	34	4	31	1	30	0	A0		A6	
	FA	DA	37	7	34	4	31	1	30	0	B0		B6	
	EA	CA	37	7	34	4	31	1	30	0	A0		A6	
	FA	DA	37	7	34	4	31	1	30	0	B0		B6	
B	EB	CB	38	8	35	5	32	2	2E	.	A1		A7	
	FB	DB	38	8	35	5	32	2	2E	.	B1		B7	
	EB	CB	38	8	35	5	32	2	2E	.	A1		A7	
	FB	DB	38	8	35	5	32	2	2E	.	B1		B7	
C	EC	CC	39	9	36	6	33	3	BF		A2		A8	
	FC	DC	39	9	36	6	33	3	AF		B2		B8	
	EC	CC	39	9	36	6	33	3	9F		A2		A8	
	FC	DC	39	9	36	6	33	3	8F		B2		B8	
D	ED	CD	90		93		82		95		A3		A9	
	FD	DD	90		93		82		95		B3		B9	
	ED	CD	90		93		82	*	95		A3	*	A9	*
	FD	DD	90		93		82	*	95		B3	*	B9	*
E	EE	CE	91		80		84		81		A4		AA	
	FE	DE	91		80		84		81		B4		BA	
	EE	CE	91		80	*	84		81	*	A4	*	AA	*
	FE	DE	91		80	*	84		81	*	B4	*	BA	*
F	EF	CF	92		94		83		96		A5		AB	
	FF	DF	92		94		83		96		B5		BB	
	EF	CF	92		94		83	*	96		A5	*	AB	*
	FF	DF	92		94		83	*	96		B5	*	BB	*

This row contains the latched keys when that mode is selected (KMR6, KMR5 = 00).

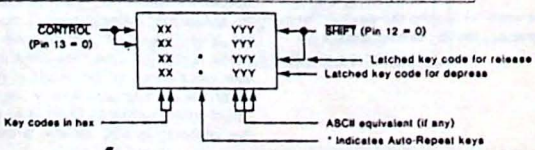

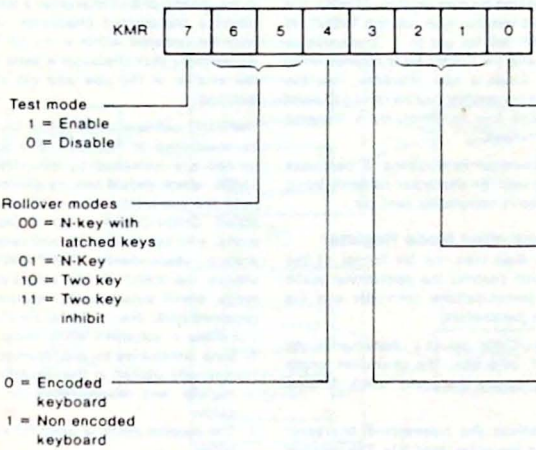

KMR2	KMR1	Key MATRIX SIZE	SCAN TIME
0	0	128	10ms
0	1	128	2.5ms
1	0	80	6.4ms
1	1	80	1.6ms

Figure 3. Keyboard Mode Register Format

Bit KMR3 enables the auto-repeat mode. In this mode, if a key that is programmed for auto-repeat is depressed for longer than one-half second, the key code will be loaded into the KDR approximately 15 times per second until that key is released. Only the non-control key codes will auto-repeat, i.e. $\overline{\text{CONTROL}}$ = 1. Table 2 specifies the auto-repeat keys.

KMR2 and KMR1 select the key matrix size and debounce time (scan rate). The keyboard row outputs (KR2, KR1, KR0) always scan from 0 to 7. The column outputs (KC3, KC2, KC1, KC0) scan from 0 to 15 for a 128 key matrix and from 0 to 9 for an 80 key matrix.

KMR0 selects between a 1kHz and 2kHz frequency to be output on the TONE pin in response to a ring tone command.

Keyboard Status Register

The keyboard status register (KSR) provides operational feedback to the CPU. Its format is illustrated in figure 4.

KSR7, 6 and 4 reflect the state of the inputs at the corresponding pins. $\overline{\text{CONTROL}}$ and $\overline{\text{SHIFT}}$ are latched at the time the key is accepted. As the verified codes are loaded into the KDR, the corresponding states of $\overline{\text{CONTROL}}$ and $\overline{\text{SHIFT}}$ are loaded into the KSR. $\overline{\text{REPEAT}}$ is updated on every matrix sample. The status bits are the complements of the input levels.

KSR5 reflects the state of the internal shift lock flag which is controlled by the set/reset shift lock commands.

KSR3 indicates that the keyboard controller is enabled. It is controlled by the set/clear keyboard enable command.

Keyboard overrun (KSR2) is set when both the KHR and KDR are full and a third key is validated. The original content of the KHR is preserved and the content of the KDR is overwritten with the new key code. This bit can be specified (by IMR1) to generate an interrupt and is cleared by the reset command with D2 = 1.

Keyboard error (KSR1) is set when the operator depresses more keys than are allowed in the selected rollover mode, or when keys are depressed simultaneously (within one scan cycle). This bit can be specified (by IMR3) to generate an interrupt and is cleared by the reset command with D1 = 1.

Keyboard data ready (KSR0) is set when the key code or address is transferred from the KDR to the KHR. This bit can be specified (by IMR2) to generate an interrupt. It is cleared when the CPU reads the KHR.

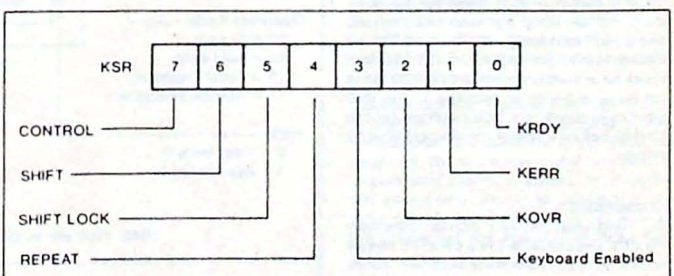

Figure 4. Keyboard Status Register Format

Communications Controller

The communications controller section of the PKCC comprises a full duplex asynchronous receiver/transmitter (UART) with a baud rate generator. Registers associated with these elements are the communications mode register (CMR), the baud rate control register (BRR), and the communications status register (CSR).

Receiver

The receiver accepts serial data on the RxD pin, converts the serial input to parallel format, checks for start bit, stop bit, parity bit (if any), or break condition, and presents the assembled character to the CPU. The receiver looks for a high to low (mark to space) transition of the start bit on the RxD input pin. If a transition is detected, the state of the RxD pin is sampled again after a delay of one half of the bit time. If RxD is then high, the start bit is invalid and the search for a valid start bit begins again. If RxD is still low, a valid start bit is assumed and the receiver continues to sample the input at one bit time intervals at the theoretical center of the bit, until the proper number of data bits and the parity bit (if any) have been assembled, and one stop bit has been detected. The least significant bit is received first. The data is then transferred to the receive holding register (RxHR) and the RxRDY bit in the CSR is set to a 1. If the character length is less than eight bits, the most significant unused bits in the RxHR are set to zero.

After the stop bit is detected, the receiver will immediately look for the next start bit. However, if a non-zero character was received without a stop bit (i.e. framing error) and RxD remains low for one half of the bit period after the stop bit was sampled, then the space is interpreted as a start bit.

The parity error, framing error and overrun error (if any) are strobed into the CSR at the received character boundary. If a break condition is detected (RxD is low for the entire character including the stop bit) only one character consisting of all zeros will be transferred to the RxHR and the received break bit in the CSR is set to 1 (RxRDY is not set when a break is received). The RxD input must return to a high condition for one bit time before a search for the next start bit begins.

Transmitter

The transmitter accepts parallel data from the CPU and converts it to a serial bit stream on the TxD output pin. It automatically sends a start bit followed by the data bits, an optional parity bit, and the programmed number of stop bits. The least significant bit is sent first. Following the transmission of the stop bits, if a new character is not available in the transmit holding register (TxHR), the TxD output remains high and the TxEMT bit in the CSR will be set to 1. Transmission resumes and the TxEMT bit is cleared when the CPU loads a new character into the TxHR. The transmitter can be forced to send a continous low condition by a transmit break command.

If the transmitter is disabled, it continues operating until the character currently being transmitted is completely sent out.

Communication Mode Register

Figure 5 illustrates the bit format of the CMR, which controls the operational mode of the communications controller and the character parameters.

Bits CMR1-CMR0 select a character length of 5, 6, 7, or 8 bits. The character length does not include the parity, start, or stop bits.

CMR2 selects the transmitted character framing as one or two stop bits. The receiver always checks for one stop bit.

The parity format is selected by bits CMR4 and CMR3. If parity or force parity is selected, a parity bit is added to the transmitted character and the receiver performs a parity check on incoming data. CMR5 selects odd or even parity and determines the polarity of the parity bit in the force parity mode.

The bits in the mode register affecting character assembly and disassembly (CMR5-CMR0) can be changed dynamically and affect the characters currently being assembled in RxSR and transmitted by TxSR. To affect assembly of a received character, the CMR must be updated within n −1 bit times of the receipt of that character's start bit. To affect a transmitted character, the CMR must be updated within n −1 bit times of transmitting that character's start bit. (n = the smaller of the new and old character lengths).

The UART can operate in one of four modes, as illustrated in figure 6. The operating modes are selected by bits CMR7 and CMR6, which should only be changed when both the transmitter and receiver are disabled. CMR7-CMR6 = 00 is the normal mode, with the transmitter and receiver operating independently. CMR7-CMR6 = 01 places the UART in the automatic echo mode, which automatically retransmits the received data. The following conditions are true while in automatic echo mode:

1. Data assembled by the receiver is automatically placed in the transmit holding register and retransmitted on the TxD output.
2. The receive clock is used for the transmitter.
3. The receiver must be enabled, but the transmitter need not be enabled.
4. Status bit TxRDY is not set. TxEMT operates normally.
5. The received parity is checked, but is not regenerated for transmission, i.e., transmitted parity bit is as received.
6. Only the first character of a break condition is echoed; the TxD output will go high until the next received character is assembled.
7. CPU to receiver communication continues normally, but the CPU to transmitter link is disabled.

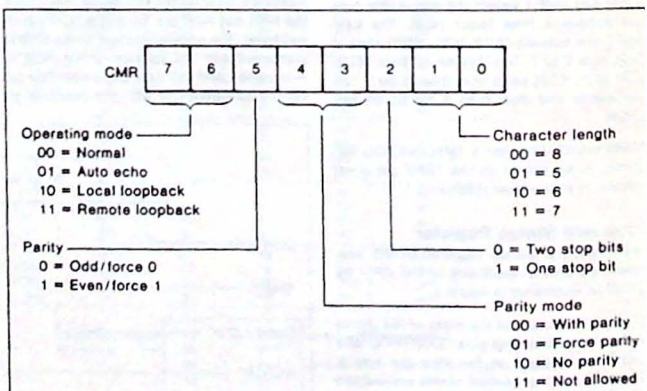

Figure 5. Communications Mode Register Format

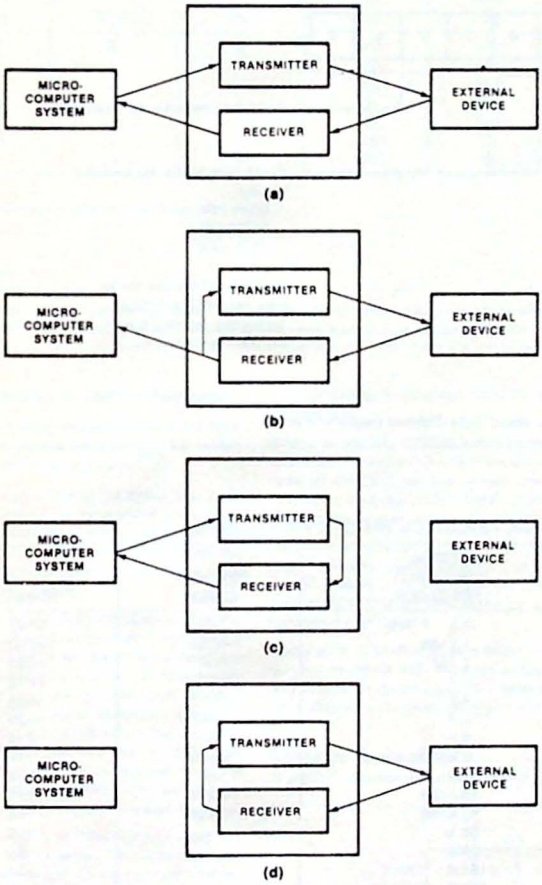

(a) Normal operating mode.
(b) Automatic echo mode.
(c) Local loopback mode.
(d) Remote loopback mode.

Figure 6. Operating Modes of the 2671 UART

Two diagnostic modes can also be configured. In local loopback mode (CMR7-CMR6 = 10):

1. The transmitter output is internally connected to the receiver input.
2. The transmit clock is used for the receiver.
3. The TxD output is held high.
4. The RxD input is ignored.
5. The transmitter must be enabled, but the receiver need not be enabled.
6. CPU to transmitter and receiver communications continue normally.

The second diagnostic mode is the remote loopback mode (CMR7-CMR6 = 11). In this mode:

1. Data assembled by the receiver is automatically placed in the transmit holding register and retransmitted on the TxD output.
2. The receive clock is used for the transmitter.
3. No data is sent to the local CPU, but the error status conditions (parity and framing) are set if required.
4. The received parity is checked, but is not regenerated for transmission, i.e., transmitted parity bit is as received.
5. The receiver must be enabled, but the transmitter need not be enabled.

Baud Rate Control Register

The baud rate control register (BRR) controls the frequency generated by the baud rate generator (BRG) and the clock source used by the receiver and transmitter. Its format is illustrated in figure 7.

BRR3-BRR0 select one of sixteen frequencies to be generated by the BRG. See table 3.

BRR7 and BRR6 select the source of the transmit and receive clocks. If external clocks are chosen, (BRR7 = 0 or BRR6 = 0), then the clock rate factor is determined by BRR5 and BRR4. The external clock input(s) should be the desired baud rate multiplied by the clock rate factor.

If internal clock(s) are specified, (BRR7 = 1 or BRR6 = 1), the clock is supplied by the internal baud rate generator at the selected baud rate. The clock rate factor for internally generated clocks is always 16. Pins 35 and 34 become outputs for transmit or receive clocks, respectively. See table 4 for the description and selection of these outputs.

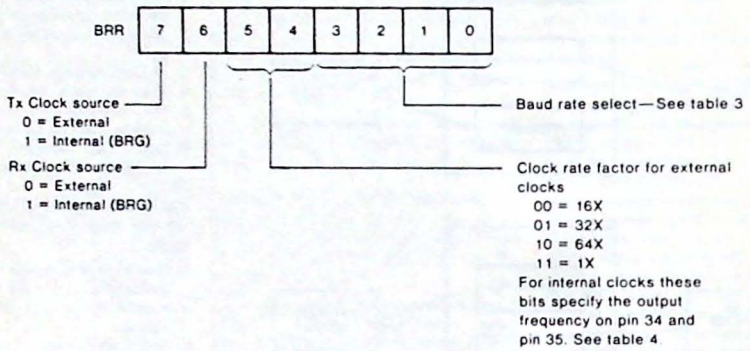

Figure 7. Baud Rate Control Register Format

Table 3 BAUD RATE GENERATOR CHARACTERISTICS (BRCLK = 4.9152MHz)

BRR3-0	BAUD RATE	ACTUAL FREQUENCY 16X CLOCK	PERCENT ERROR	DIVISOR
0000	50	0.8 kHz	—	6144
0001	110	1.7598	−0.01	2793
0010	134.5	2.152	—	2284
0011	150	2.4	—	2048
0100	200	3.2	—	1536
0101	300	4.8	—	1024
0110	600	9.6	—	512
0111	1050	16.8329	+0.20	292
1000	1200	19.2	—	256
1001	1800	28.7438	−0.20	171
1010	2000	31.9168	−0.26	154
1011	2400	38.4	—	128
1100	4800	76.8	—	64
1101	9600	153.6	—	32
1110	19200	307.2	—	16
1111	38400	614.4	—	8

Table 4 BAUD RATE CONTROL REGISTER

BRR7-BRR4	CLOCK SOURCE		PIN FUNCTIONS		BRR3-BRR0 BAUD RATE SELECTION
	TxC	RxC	PIN 34	PIN 35	
00**	E	E	TxC	RxC	The baud rates are listed in table 3.
01**	E	I	TxC	1X	
10**	I	E	16X	RxC	
1100	I	I	1X	1X	
1101	I	I	1X	16X	
1110	I	I	16X	1X	
1111	I	I	16X	16X	

NOTES:

1. ** = Clock rate factor for external clocks: 00 = 16X
   01 = 32X
   10 = 64X
   11 = 1X
2. E = External clock.
3. I = Internal clock (BRG).
4. 1X and 16X are clock outputs at 1 or 16 times the actual baud rate. For receive, the 1X output is the actual data sample clock.
5. BRR7-BRR6 = 01 or 10 not permitted in automatic echo or remote loopback modes unless BRR5-BRR4 = 00.

Communications Status Register

Figure 8 illustrates the bit format of the communications status register (CSR), which provides UART status to the CPU.

Receiver ready (CSR0) indicates that a received character is assembled and transferred to the RxHR and is ready to be read by the CPU. This bit can be specified (by IMR0) to generate an interrupt and is reset by reading the RxHR.

Transmitter ready (CSR1) indicates that the TxHR is empty and ready to be loaded with a character. This bit will be cleared when the TxHR is loaded and has not yet transferred the character to the transmit shift register (TxSR). TxRDY is reset when the transmitter is disabled. It will be set when the transmitter is enabled, provided that no data was loaded into the TxHR during the time the transmitter was disabled. This bit can be specified (by IMR7) to generate an interrupt.

Transmitter empty (CSR2) indicates that the transmitter has underrun, i.e., both the TxHR and TxSR are empty. This bit can only be set after transmission of at least one character, and is cleared when the TxHR is loaded by the CPU. TxEMT is reset when the transmitter is disabled. This bit can be specified (by IMR6) to generate an interrupt.

CSR3 will be set when the PKCC receives a command to transmit a break. This bit will be reset after the break is completed.

Received break (CSR4) indicates that an all zero character of the programmed length has been received without a stop bit. Breaks beginning in the middle of a received character can be detected. This bit is cleared when RxD returns to a high state for at least one bit time.

Receiver overrun (CSR5) indicates that the previous character in the RxHR has not been read by the CPU and that a new character has been loaded into the RxHR. This bit is cleared by a reset command with D3 = 1.

Framing error (CSR6) indicates that the stop bit has not been detected. The stop bit check is made in the middle of the first stop bit position. This bit is cleared by a reset command with D3 = 1.

Parity error (CSR7) indicates that a character was received with incorrect parity when 'with parity' or 'force parity' is enabled. This bit is cleared by a reset command with D3 = 1.

Interrupt Controller

The 2671 contains a maskable interrupt status register (ISR) which can be enabled to generate an active low interrupt request on the $\overline{INTR}$ output. The eight interrupt conditions in the ISR are individually enabled by writing a 1 into the corresponding bit of the interrupt mask register (IMR).

Each of the interrupt conditions is assigned a priority and a vector. When an enabled ISR bit is set, the 2671 asserts the $\overline{INTR}$ output. If the CPU activates the $\overline{INTA}$ input, the 2671 responds by placing the corresponding 8-bit vector on the data bus (D7-D0). If multiple interrupts are pending, the vector corresponds to the condition with the highest priority. The interrupt will persist until all pending interrupt conditions are cleared.

The ISR can also be polled by reading at address A2-A0 = 000. All pending interrupt conditions which are enabled by the IMR will be read independent of priority.

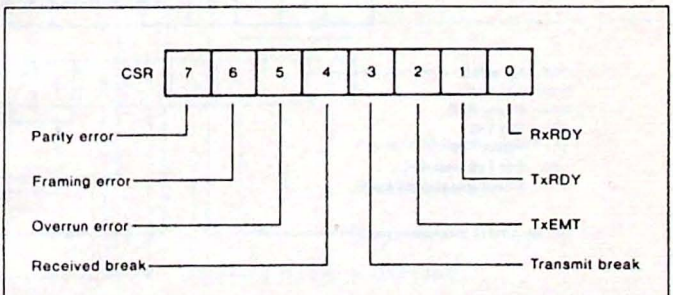

Figure 8. Communications Status Register Format

The bit assignments of the ISR and IMR and corresponding vectors and priorities are listed in table 5.

COMMANDS

In addition to the control exercised by programming of the PKCC control registers, several functions can be performed by executing command operations. There are two classes of commands which are initiated by writing to the 2671 at address A2-A0 = 000 (reset command) and address A2-A0 = 111 (miscellaneous commands). Individual commands are specified by the bit pattern on the data bus (D7-D0).

Reset Commands

The reset command bit format is illustrated in figure 9 and the detail command descriptions are given in table 6.

A reset command with D7-D0 = 111XXXX1 is a master reset for the 2671. This command must be given following a power on condition to release the internal power on reset latch which deactivates the 2671 on power up.

Miscellaneous Commands

The miscellaneous command format is illustrated in figure 10.

The transmit break commands force a break (steady low output) on the TxD pin immediately or after the character in the TxSR (if any) is transmitted. A timed break lasts for approximately 200ms, and a character break lasts for one character time including parity and stop bit time. In either case, TxRDY (CSR1) will be set at the beginning of the break which can be extended indefinitely (by 200ms or one character time increments) by reasserting the command in response to TxRDY. Note that these commands reset TxRDY. When a transmit break command is asserted, CSR3 will be set. This bit will be cleared after the break is completed.

The ring tone commands cause the tone generator to output a square wave on the TONE output. The tone durations are specified by the commands:

Ring tone short = 25ms
Ring tone long = 100ms

The tone frequency is either 1kHz or 2kHz, as specified by KMR0.

TABLE 5 INTERRUPT MASK REGISTER (IMR) AND INTERRUPT STATUS REGISTER (ISR)

BIT IN IMR/ISR	INTERRUPT CONDITION	PRIORITY	VECTOR ON D7-D0 BINARY	HEX	CONDITION RESET BY:
IMR0/ISR0	RxRDY	1	11001111	CF	Read RxHR
IMR1/ISR1	KOVR	2	11010111	D7	Reset CMD (D2 = 1)
IMR2/ISR2	KRDY	3	11011111	DF	Read KHR
IMR3/ISR3	KERR	4	11100111	E7	Reset CMD (D1 = 1)
IMR4/ISR4	XINT[1]	5	11101111	EF	External
IMR5/ISR5	ΔBREAK[2]	6	11110111	F7	Reset CMD (D4 = 1)
IMR6/ISR6	TxEMT	7	11000111	C7	Load TxHR
IMR7/ISR7	TxRDY	8	11000111	C7	Load TxHR

NOTES:
1. XINT is an input from an external interrupt source, active low (pin 21).
2. ΔBREAK refers to the change of a received break condition.

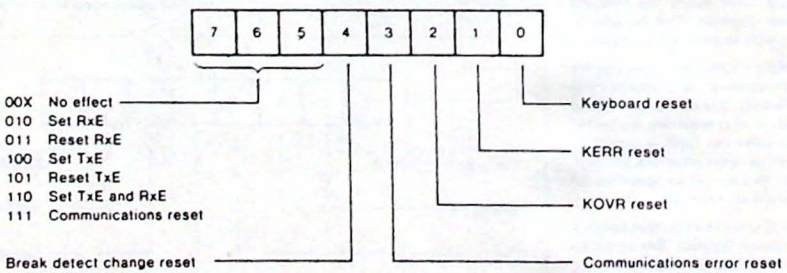

Figure 9. Reset Command Format

Table 6 RESET COMMAND DESCRIPTION

COMMAND	RESETS	COMMENTS
Keyboard reset	KMR7-KMR0 KSR5, KSR3-KSR0 IMR3-IMR1	The keyboard controller is reset, ignoring the input at KRET.
KERR reset	KSR1	Keyboard error status bit reset.
KOVR reset	KSR2	Keyboard overrun status bit reset.
Communications error reset	CSR7-CSR5	Resets the receiver overrun, parity, and framing error status bits.
Break detect change reset	ISR5	Resets the break detect change bit in the interrupt status register.
Set RxE	See note.	Enables receiver operation.
Reset RxE	CSR7-CSR4, CSR0 See note.	Disables the receiver.
Set TxE	See note.	Enables transmitter operation.
Reset TxE	CSR3-CSR1 See note.	Disables the transmitter. Sets the TxD output to a 1 after transmitting the character in TxSR.
Communications reset	CMR, CSR, BRR, TxE, RxE, IMR7-IMR5, IMR0	Resets the communication controller. The RxD input is ignored and the TxD output is set to a 1.
Master reset	CMR, CSR, BRR, TxE, RxE, KMR, KSR5, KSR3-KSR0, IMR7-IMR0. Releases the internally latched power on reset.	Resets the keyboard and communication controllers. Inputs at KRET and RxD are ignored and the TxD output is set to a 1.

NOTE
Command does not affect the CMR or the BRR.

The set/clear shift lock commands control the state of the internal shift lock flip flop. When shift lock is set, the keyboard controller encodes all key depressions as if the $\overline{\text{SHIFT}}$ input was asserted. The state of the shift lock flip flop is reflected in KSR5.

The set keyboard enable command enables the keyboard controller and sets KSR3 in the keyboard status register. The clear keyboard enable command resets KSR3 and disables key processing at the KRET input. The keyboard controller is not reset by this command, and the current state of the keyboard (key depressions and latched key states) is preserved internally. When the keyboard is subsequently enabled, key processing resumes, old and new keys are debounced, and latched keys are encoded if there has been a change in their state.

MASK PROGRAMMABLE OPTIONS

Characteristics of certain portions of the PKCC are internally programmed by means of a read only memory. The items which can be programmed are:

- Key codes
- Auto-repeat keys
- Scan times, tone frequency, and tone duration
- Baud rates
- Interrupt vectors

Consult your local Signetics representative for costs, minimum quantities, and data submission requirements for customized versions of the PKCC.

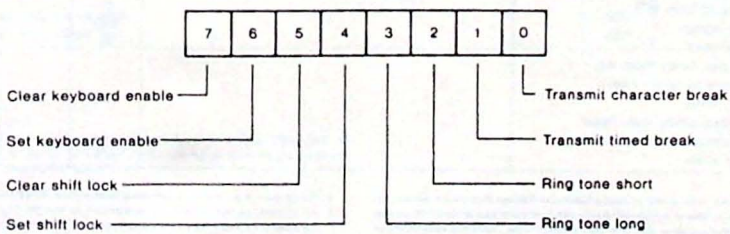

Figure 10. Miscellaneous Commands Format

ABSOLUTE MAXIMUM RATINGS[1]

PARAMETER	RATING	UNIT
Operating ambient temperature[2]	0 to +70	°C
Storage temperature	−65 to +150	°C
All voltages with respect to ground[3]	−0.5 to +6.0	V

DC ELECTRICAL CHARACTERISTICS $T_A = 0°C$ to $+70°C$, $V_{CC} = 5V \pm 5\%$[4,5,6]

	PARAMETER	TEST CONDITIONS	LIMITS Min	LIMITS Typ	LIMITS Max	Unit
V_{IL}	Input low voltage				0.8	V
V_{IH}	Input high voltage					
	XTAL1, XTAL2/BRCLK		4.0			V
	All other inputs		2.0			V
V_{OL}	Output low voltage	$I_{OL} = 1.6mA$			0.4	V
V_{OH}	Output high voltage (except $\overline{INTR}$)	$I_{OH} = -100\mu A$	2.4			V
I_{IL}	Input leakage current (except XTAL1, XTAL2/BRCLK)	$V_{IN} = 0$ to V_{CC}	−10		10	μA
I_{XTLIL}	Input low current	$V_{IN} = 0$				
	XTAL1		−80	−30		μA
	XTAL2/BRCLK[9]		−4.0	−1.5		mA
I_{XTLIH}	Input high current	$V_{IN} = V_{CC}$				
	XTAL1			30	80	μA
	XTAL2/BRCLK[9]			0.2	1.0	mA
I_{LL}	Data bus 3-state leakage current	$V_O = 0$ to V_{CC}	−10		10	μA
I_{CC}	Power supply current				150	mA

AC ELECTRICAL CHARACTERISTICS $T_A = 0°$ to $+70°C$, $V_{CC} = 5V \pm 5\%$[4,5,6]

	PARAMETER	TEST CONDITIONS	LIMITS Min	LIMITS Typ	LIMITS Max	UNIT
Read timing[7]						
t_{AS}	Address setup to $\overline{RD}$		50			ns
t_{CS}	$\overline{CE}$ setup to $\overline{RD}$		50			ns
t_{PW}	$\overline{RD}$ pulse width		250			ns
t_{AH}	Address hold from $\overline{RD}$		20			ns
t_{CH}	$\overline{CE}$ hold from $\overline{RD}$		0			ns
t_{DD}	Data delay for read	$C_L = 150pF$			200	ns
t_{DF}	Data bus floating time for read	$C_L = 150pF$	10		100	ns
t_{AD}	Access delay from any read to next read or write		250			ns
Write timing[8]						
t_{AS}	Address setup to $\overline{WR}$		50			ns
t_{CS}	$\overline{CE}$ setup to $\overline{WR}$		50			ns
t_{PW}	$\overline{WR}$ pulse width		250			ns
t_{AH}	Address hold from $\overline{WR}$		20			ns
t_{CH}	$\overline{CE}$ hold from $\overline{WR}$		0			ns
t_{DS}	Data setup		100			ns
t_{DH}	Data hold		10			ns
t_{AD}	Access delay from any write to next read or write		250			ns
t_{AD}	Access delay from reset command to next read or write		1.0			μs

NOTES

1. Stresses above those listed under Absolute Maximum Ratings may cause permanent damage to the device. This is stress rating only and functional operation of the device at these or at any other condition above those indicated in the operation section of this specification is not implied
2. For operating at elevated temperatures, the device must be derated based on +150°C maximum junction temperature
3. This product includes circuitry specifically designed for the protection of its internal devices from damaging effects of excessive static charge. Nonetheless, it is suggested that conventional precautions be taken to avoid applying any voltages larger than the rated maxima
4. Parameters are valid over operating temperature range unless otherwise specif
5. All voltage measurements are referenced to ground (V_{SS}). All input signals between 0.4V and 2.4V with a transition time of 20ns maximum and time measure are referenced at input voltages of 0.8V, 2.0V and at output voltages of 0.8V, 2 appropriate, unless otherwise specified
6. Typical values are at +25°C, typical supply voltages and typical processing p eters
7. See figure 11
8. See figure 12
9. XTAL2 input currents are measured with XTAL1 grounded

AC ELECTRICAL CHARACTERISTICS (Cont.)

PARAMETER		TEST CONDITIONS	LIMITS Min	LIMITS Typ	LIMITS Max	UNIT
Interrupt acknowledge timing[9]						
t_{PWI}	$\overline{INTA}$ pulse width		300			ns
t_{DDI}	Data delay time for interrupt vector	C_L = 150pF			250	ns
t_{DFI}	Data bus floating time after $\overline{INTA}$	C_L = 150pF	10		100	ns
t_{ADI}	$\overline{INTA}$ to $\overline{INTA}$ access delay		300			ns
$\overline{INTR}$ reset timing[10]						
t_{RI}	$\overline{INTR}$ delay from:					
	Read RxHR (RxRDY)				400	ns
	Read KHR (KRDY)				400	ns
	Reset commands (KOVR,KERR,BREAK)				450	ns
	Load TxHR (TxEMT,TxRDY)				400	ns
	Mask bit reset				300	ns
Keyboard timing[11]						
f_{KCLK}	KCLK frequency			409		kHz
t_{KBD}	KR_i, KC_j to KRET sample delay:					
	FAST SCAN		12.0			µs
	SLOW SCAN		55.0			µs
t_{POS}	Scan time per matrix position:					
	FAST SCAN			20		µs
	SLOW SCAN			80		µs
t_{KRD}	KDRES delay from KCLK	C_L = 150pF			400	ns
t_{KRH}	KDRES hold from KCLK	C_L = 150pF			400	ns
t_{HYSD}	$\overline{HYS}$ delay from KCLK	C_L = 150pF			600	ns
t_{RCD}	KR_i, KC_j delay from KCLK	C_L = 150pF			400	ns
UART timing[12]						
t_{RXS}	RxD setup time		200			ns
t_{RxH}	RxD hold time		200			ns
t_{TxD}	TxD delay from falling edge of TxC	C_L = 150pF			300	ns
t_{TCS}	Skew between TxD transition and falling edge of TxC output	C_L = 150pF		0		ns
t_{BRH}	XTAL1 clock high[13]		70			ns
t_{BRL}	XTAL1 clock low[13]		70			ns
f_{BRG}	BRG input frequency		1.0	4.9152	5.075	MHz
$f_{R/T}$	TxC or RxC input frequency	Clock rate factor = 16X, 32X, 64X			1.3	MHz
$f_{R/T}$	TxC or RxC input frequency	Clock rate factor = 1X			1.0	MHz
$t_{R/TH}$	TxC or RxC clock high		350			ns
$t_{R/TL}$	TxC or RxC clock low		350			ns

NNOTES

1 9. See figure 13.

1 10. See figure 14.

1 11. See figure 15 and 16.

1 12. See figure 17, 18, and 19.

1 13. See figures 20 and 21 for XTAL1, XTAL2 connections for driving XTAL2 with an external clock. Input levels for XTAL1 and XTAL2 are $V_{IL} \leq 0.8V$, $V_{IH} \geq 4.0V$, and t_{BRL} and t_{BRH} are measured at these levels.

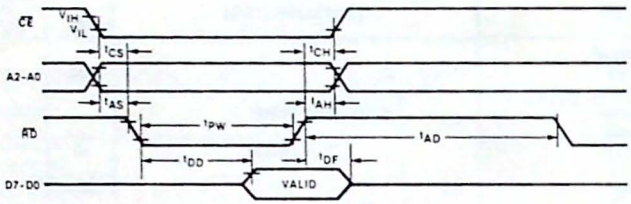

Figure 11. Read Timing

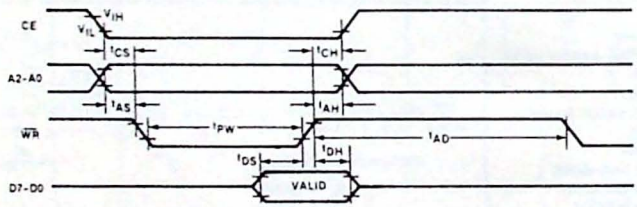

Figure 12. Write Timing

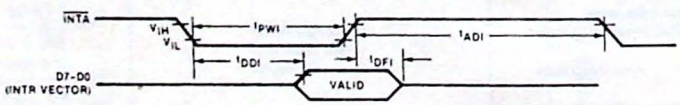

Figure 13. Interrupt Acknowledge Timing

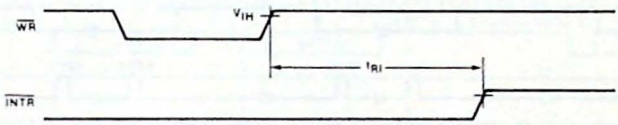

Figure 14. Interrupt Reset Timing

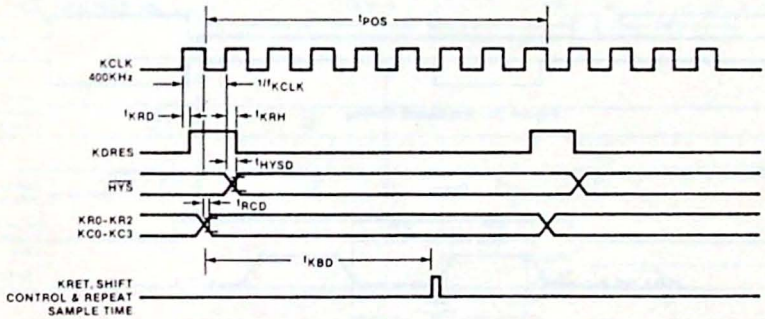

NOTE
SCAN TIMING SHOWN IS FOR FAST SCAN (KMR1 = 1). FOR SLOW SCAN (KMR1 = 0) ALL SIGNALS EXCEPT KCLK RUN AT ¼ THE SHOWN RATES.

Figure 15. Keyboard Scan Timing

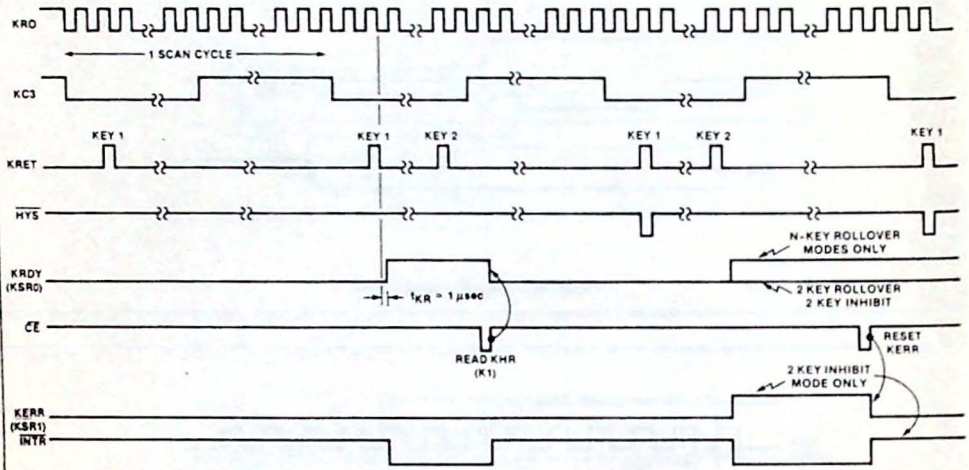

Figure 16. Keyboard Timing

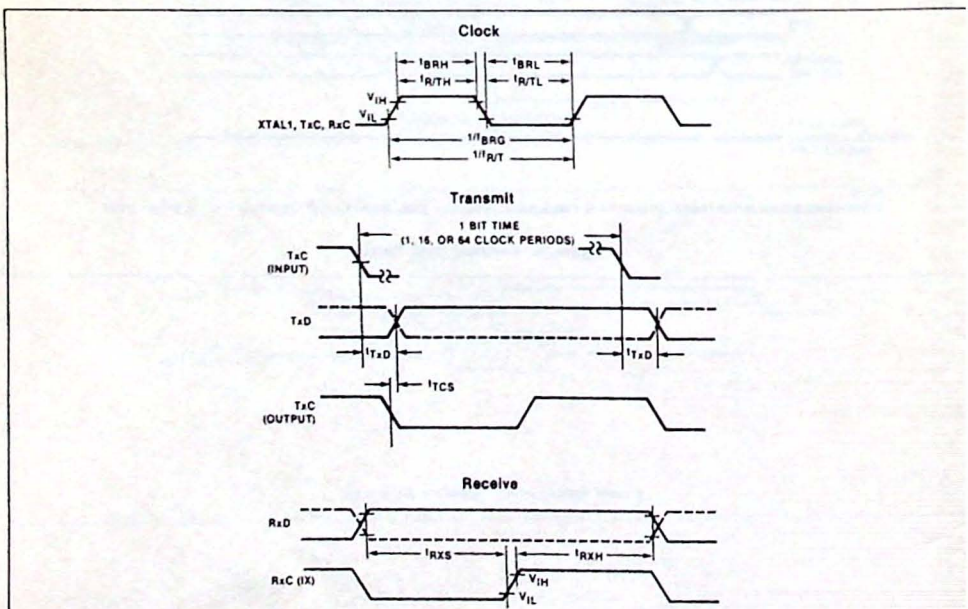

Figure 17.

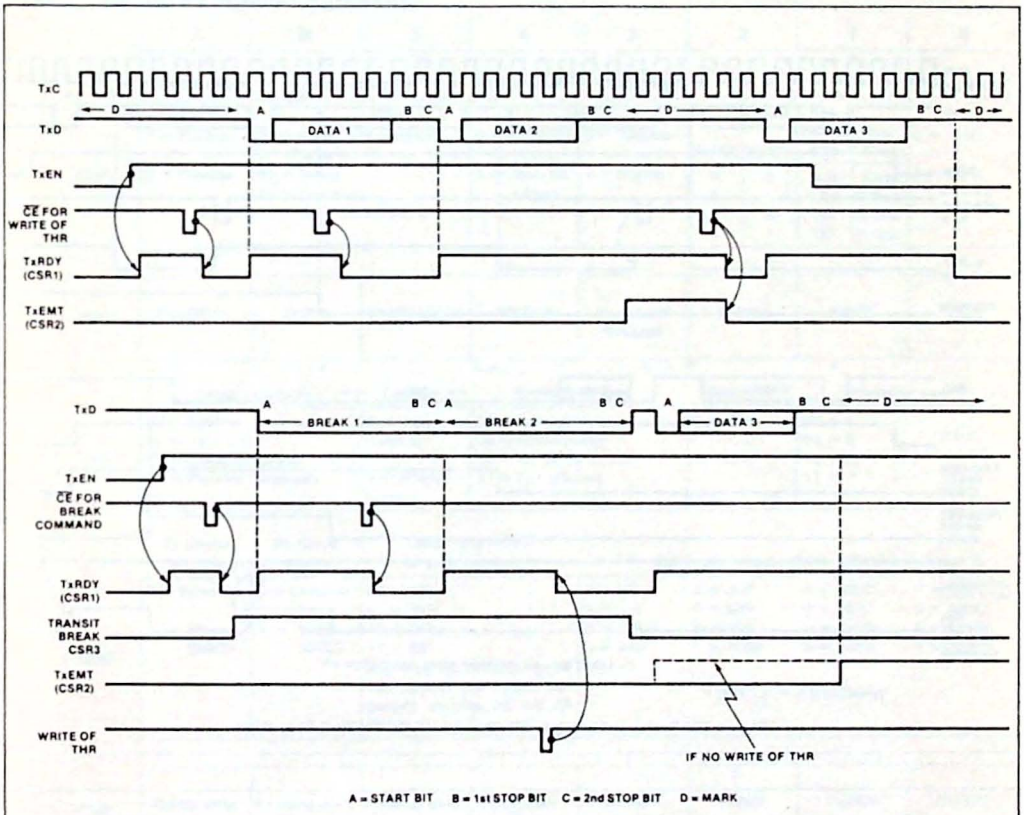

Figure 18. Transmitter Timing (5-Bit Characters, no Parity, 2 Stop Bits)

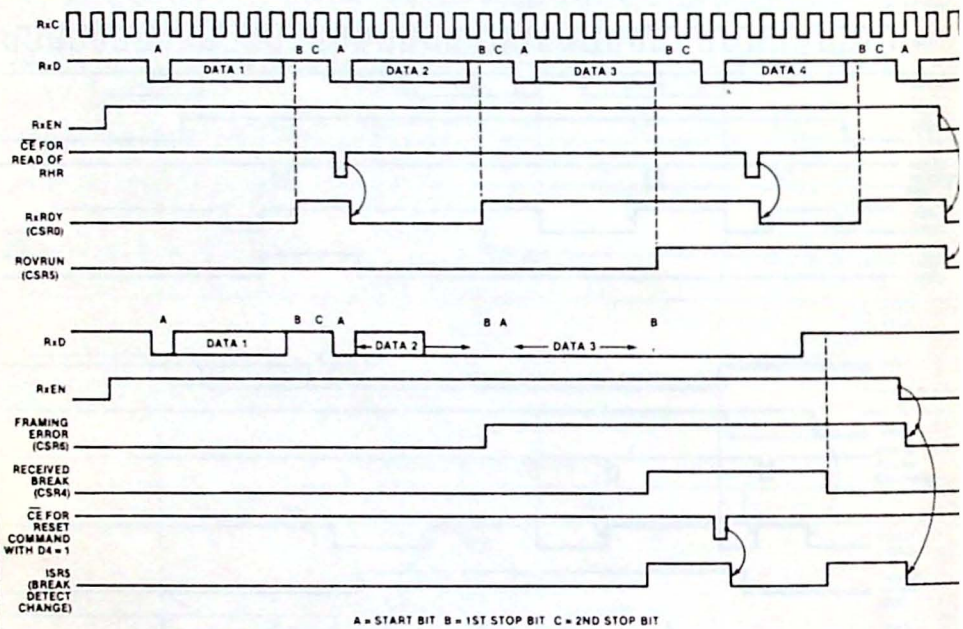

Figure 19. Receiver Timing (5-Bit Characters, no Parity, 2 Stop Bits)

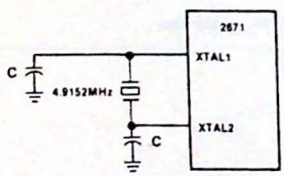

C = 15-25pF

Figure 20. Crystal Connections BRG Clock

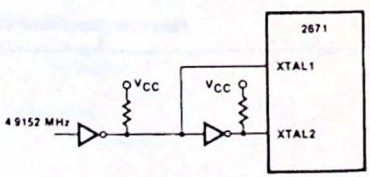

Figure 21. Connection for External BRG Clock Source

Table 7 REGISTER FORMAT SUMMARY

	7	6	5	4	3	2	1	0
	Test mode	Rollover modes		Keyboard	Auto repeat			Tone select
KMR	1 = Enable 0 = Disable	00 = N-key with latched keys 01 = N-key 10 = Two keys 11 = Two key inhibit		0 = Encoded 1 = Non encoded	0 = Disable 1 = Enable	KMR2 / KMR1 0 / 0 0 / 1 1 / 0 1 / 1	Key Matrix Size / Scan Time 128 / 10ms 128 / 2.5ms 80 / 6.4ms 80 / 1.6ms	0 = 1kHz 1 = 2kHz
KSR	CONTROL	SHIFT	SHIFT LOCK	REPEAT	Keyboard Enabled	KOVR	KERR	KRDY
	Operating Mode		Parity	Parity Mode		Stop Bits	Character Length	
CMR	00 = Normal 01 = Auto echo 10 = Local loopback 11 = Remote loopback		0 = Odd/force 0 1 = Even/force 1	00 = With parity 01 = Force parity 10 = No parity 11 = Not allowed		0 = Two 1 = One	00 = 8 01 = 5 10 = 6 11 = 7	
	Tx Clock source	Rx Clock source	Clock rate factor for external clocks	Baud rate select (BRR3 - BRR0 in hex)				
BRR	0 = External 1 = Internal (BRG)	0 = External 1 = Internal (BRG)	00 = 16X 01 = 32X 10 = 64X 11 = 1X For internal clocks these bits specify the output frequency on pins 34 and 35 (table 4).	0 = 50 1 = 110 2 = 134.5 3 = 150	4 = 200 5 = 300 6 = 600 7 = 1050	8 = 1200 9 = 1800 A = 2000 B = 2400	C = 4800 D = 9600 E = 19200 F = 38400	
				(BRCLK = 4.9152MHz)				
CSR	Parity error	Framing error	Overrun error	Received break	Transmit break	TxEMT	TxRDY	RxRDY
IMR/ISR	TxRDY	TxEMT	BREAK CHANGE	XINT	KERR	KRDY	KOVR	RxRDY
Reset Command Format	00X = No effect 010 = Set RxE 011 = Reset RxE 100 = Set TxE	101 = Reset TxE 110 = Set TxE and RxE 111 = Communications reset		Break detect change reset	Communications error reset	KOVR reset	KERR reset	Keyboard reset
Miscellaneous Commands Format	Clear keyboard enable	Set keyboard enable	Clear shift lock	Set shift lock	Ring tone long	Ring tone short	Transmit timed break	Transmit character break

PROGRAMMABLE VIDEO TIMING CONTROLLER (PVTC) SCN2672

DESCRIPTION

The Signetics SCN2672 Programmable Video Timing Controller (PVTC) is a programmable device designed for use in CRT terminals and display systems that employ raster scan techniques. The PVTC generates the vertical and horizontal timing signals necessary for the display of interlaced or non-interlaced data on a CRT monitor. It provides consecutive addressing to a user specified display buffer memory domain and controls the CPU-display buffer interface for various buffer configuration modes. A variety of operating modes, display formats, and timing profiles can be implemented by programming the control registers in the PVTC.

A minimum CRT terminal system configuration consists of a PVTC, a SCN2671 Keyboard and Communication Controller (PKCC), a SCN2670 Display Character and Graphics Generator (DCSG), a SCN2670 Video and Attributes Controller (VAC), a single chip microcomputer such as the 8048, a display buffer RAM, and a small amount of TTL for miscellaneous address decoding, interface, and control. Typically, the package count for a minimum system is between 15 and 20 devices; system complexity can be enhanced by upgrading the microprocessor and expanding via the system address and data busses.

FEATURES

4MHz and 2.7MHz character rate versions

- Up to 256 characters per row
- 1 to 16 raster lines per character row
- Up to 128 character rows per frame
- Programmable horizontal and vertical sync generators
- Interlaced or non-interlaced operation
- Up to 16K RAM addressing for multiple page operation
- Automatic wraparound of RAM
- Addressable incrementable and readable cursor
- Programmable cursor size, position, and blink
- Split screen and horizontal scroll capability
- Light pen register
- Selectable buffer interface modes
- Dynamic RAM refresh
- Completely TTL compatible
- Single +5 volt power supply
- Power on reset circuit

APPLICATIONS

- CRT terminals
- Word processing systems
- Small business computers
- Home Computers

PIN CONFIGURATION

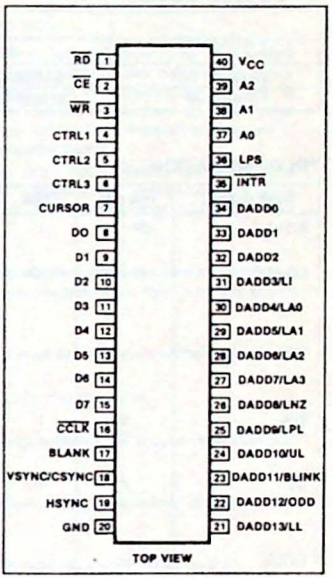

BLOCK DIAGRAM

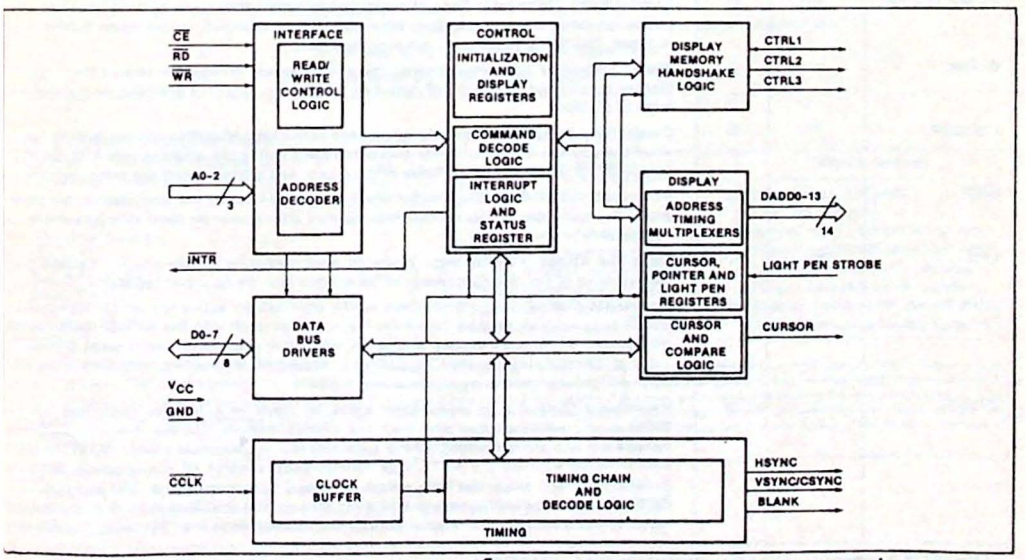

ORDERING CODE

PACKAGES	$V_{CC} = 5V \pm 5\%$, $T_A = 0°C$ to $70°C$	
	4MHz*	2.7MHz*
Ceramic DIP	SCN2672BC4I40	SCN2672BC3I40
Plastic DIP	SCN2672BC4N40	SCN2672BC3N40

PIN DESIGNATION

MNEMONIC	PIN NO.	TYPE	NAME AND FUNCTION
A0–A2	37–39	I	**Address Lines:** Used to select PVTC internal registers for read/write operations and for commands.
D0–D7	8–15	I/O	**8-Bit Bidirectional Three-State Data Bus.** Bit 0 is the LSB and bit 7 is the MSB. All data, command, and status transfers between the CPU and the PVTC takeplace over this bus. The direction of the transfer is controlled by the $\overline{RD}$ and $\overline{WR}$ inputs when the $\overline{CE}$ input is low. When the $\overline{CE}$ input is high, the data bus is in the three-state condition.
$\overline{RD}$	1	I	**Read Strobe:** Active low input. A low on this pin while $\overline{CE}$ is low causes the contents of the register selected by A0–A2 to be placed on the data bus. The read cycle begins on the leading (falling) edge of $\overline{RD}$.
$\overline{WR}$	3	I	**Write Strobe:** Active low input. A low on this pin while $\overline{CE}$ is also low causes the contents of the data bus to be transferred to the register selected by A0–A2. The transfer occurs on the trailing (rising) edge of $\overline{WR}$.
$\overline{CE}$	2	I	**Chip Enable:** Active low input. When low, data transfers between the CPU and the PVTC are enabled on D0–D7 as controlled by the $\overline{WR}$, $\overline{RD}$, and A0–A2 inputs. When $\overline{CE}$ is high the PVTC is effectively isolated from the data bus and D0–D7 are placed in the three-state condition.
$\overline{CCLK}$	16	I	**Character Clock:** Timing signal derived from the video dot clock which is used to synchronize the PVTC's timing functions.
HSYNC	19	O	**Horizontal Sync:** Active high output which provides video horizontal sync pulses. The timing parameters are programmable.
VSYNC/CSYNC	18	O	**Vertical Sync/Composite Sync:** A control bit selects either vertical or composite sync pulses on this active high output. When CSYNC is selected, equalization pulses are included. The timing parameters are programmable.
BLANK	17	O	**Blank:** This active high output defines the horizontal and vertical borders of the display. Display control signals which are output on DADD3 thru DADD13 are valid on the trailing edge of BLANK.
CURSOR	7	O	**Cursor Gate:** This active high output becomes active for a specified number of scan lines when the address contained in the cursor registers match the address output on DADD thru DADD13. The first and last lines of the cursor and a blink option are programmable.
$\overline{INTR}$	35	O	**Interrupt Request:** Open drain output which supplies an active low interrupt request from any of five maskable sources. This pin is inactive after power on reset or a master reset command.
LPS	36	I	**Light Pen Strobe:** Positive edge triggered input indicating a light pen hit. Causes the current value of the display address to be strobed into the light pen register.
CTRL1	4	I/O	**Handshake Control 1:** In independent mode, provides an active low write data buffer ($\overline{WDB}$) output which strobes data from the interface latch into the display memory. In transparent and shared modes, this is an active low processor bus request ($\overline{PBREQ}$) input which indicates that the CPU desires to access the display memory. This pin must be tied high when operating in row buffer mode.
CTRL2	5	O	**Handshake Control 2:** In independent mode, provides an active low read data buffer ($\overline{RDB}$) output which strobes data from the display memory into the interface latch. In transparent and shared modes, this is an active low bus external enable ($\overline{BEXT}$) output which indicates that the PVTC has relinquished control of the display memory (DADD0–DADD13 are in the three-state condition) in response to a CPU bus request. $\overline{BEXT}$ also goes low in response to a 'display off and float DADD' command. In row buffer mode, it is an active low bus request ($\overline{BREQ}$) output which halts the CPU during a line DMA.

*The 2672B is completely compatible with the SCN2672A. The 2672B has an improved "Write from Cursor to Pointer" command (see description, Delayed Commands).

PIN DESIGNATION (cont.)

MNEMONIC	PIN NO.	TYPE	NAME AND FUNCTION
CTRL3	6	O	**Handshake Control 3:** In independent mode, provides the active low buffer chip enable ($\overline{BCE}$) signal to the display memory. In transparent and shared modes, provides an active low bus acknowledge ($\overline{BACK}$) output which serves as a ready signal to the CPU in response to a processor bus request. In row buffer mode, this is an active high memory bus control (MBC) output which configures the system for the DMA transfer of one row of character codes from system memory to the row display buffer.
DADD0–DADD13	34–21	O	**Display Address:** Used by the PVTC to address up to 16K of display memory. These outputs are floated at various times depending on the buffer mode. Various control signals are multiplexed on DADD3 thru DADD13 and are valid at the trailing edge of BLANK. These control signals are: **DADD3/LI** **Line Interlace:** Replaces DADD4/LA0 as the least significant line address for interlaced sync and video applications. A low indicates an even row of an even field or an odd row of an odd field. **DADD4–DADD7/LA0–LA3** **Line Address:** Provides the number of the current scan line within each character row. **DADD8/LNZ** **Line Zero:** Asserted before the first scan line in each character row. **DADD9/LPL** **Light Pen Line:** Asserted before the scan line which matches the programmed light pen line position (line 3, 5, 7, or 9). **DADD10/UL** **Underline:** Asserted before the scan line which matches the programmed underline position (line 0 thru 15). **DADD11/BLINK** **Blink frequency:** Provides an output divided down from the vertical sync rate. **DADD12/ODD** **Odd Field:** Active high signal which is asserted before each scan line of the odd field when interlace is specified. **DADD13/LL** **Last Line:** Asserted before the last scan line of each character row.
V_{CC}	40	I	**Power Supply:** +5 volts ± 5% power input.
GND	20	I	**Ground:** Signal and power ground input.

FUNCTIONAL DESCRIPTION

As shown on the block diagram, the PVTC contains the following major blocks:

- Data bus buffer
- Interface Logic
- Operation Control
- Timing
- Display Control
- Buffer Control

Data Bus Buffer

The data bus buffer provides the interface between the external and internal data buses. It is controlled by the operation control block to allow read and write operations to take place between the controlling CPU and the PVTC.

Interface Logic

The interface logic contains address decoding and read and write circuits to permit communications with the microprocessor via the data bus buffer. The functions performed by the CPU read and write operations are as shown in table 1.

Table 1 PVTC ADDRESSING

A2	A1	A0	READ (RD=0)	WRITE (WR=0)
0	0	0	Interrupt register	Initialization registers[1]
0	0	1	Status register	Command register
0	1	0	Screen start address lower register	Screen start address lower reg.
0	1	1	Screen start address upper register	Screen start address upper reg.
1	0	0	Cursor address lower register	Cursor address lower register
1	0	1	Cursor address upper register	Cursor address upper register
1	1	0	Light pen address lower register	Display pointer address lower reg.
1	1	1	Light pen address upper register	Display pointer address upper reg.

NOTE

1. There are 11 initialization registers which are accessed sequentially via a single address. The PVTC maintains an internal pointer to these registers which is incremented after each write at this address until the last register (IR10, the split screen register) is accessed. The pointer then continues to point to the split screen register. Upon power-up or a master reset command, the internal pointer is reset to point to the first register (IR0) of the initialization register group. The internal pointer can also be preset to any register of the group via the 'load IR address pointer' command.

Operation Control

The operation control section decodes configuration and operation commands from the CPU and generates appropriate signals to other internal sections to control the overall device operation. It contains the timing and display registers which configure the display format and operating mode, the interrupt logic, and the status register which provides operational feedback to the CPU.

Timing

The timing section contains the counters and decoding logic necessary to generate the monitor timing outputs and to control the display format. These timing parameters are selected by programming of the initialization registers.

Display Control

The display control section generates linear addressing for up to 16K bytes of display memory. Internal comparators limit the portion of the memory which is displayed to programmed values. Additional functions performed in this section include cursor positioning, storage of light pen 'hit' location, and address comparisons required for generation of timing signals and the split screen interrupt.

Buffer Control

The buffer control section generates three signals which control the transfer of data between the CPU and the display buffer memory. Four system configurations requiring four different 'handshaking' schemes are supported. These are described below.

SYSTEM CONFIGURATIONS

Figure 1 illustrates the block diagram of a typical display terminal using the Signetics 2670, 2671, 2672, and 2673 CRT terminal devices. In this system, the CPU examines inputs from the data communications line and the keyboard and places the data to be displayed in the display buffer memory. This buffer is typically a RAM which holds the data for a single or multiple screenload (page) or for a single character row.

The PVTC supports four common system configurations of display buffer memory, designated the independent, transparent, shared, and row buffer modes. The first three modes utilize a single or multiple page RAM and differ primarily in the means used to transfer display data between the RAM and the CPU. The row buffer mode makes use of a single row buffer (which can be a shift register or a small RAM) that is upd ed in real time to contain the appropri display data.

The user programs bits 0 and 1 of IRC select the mode best suited for the syst environment. The CNTRL 1–3 outputs p form different functions for each mode i are named accordingly in the descriptio each mode.

Independent Mode

The CPU to RAM interface configuration this mode is illustrated in figure 2. Tran of data between the CPU and display m ory is accomplished via a bidirectio latched port and is controlled by the sig read data buffer ($\overline{RDB}$), write data bu ($\overline{WDB}$), and buffer chip enable ($\overline{BCE}$). T mode provides a non–contention type of eration that does not require addr multiplexers. The CPU does not address memory directly—the read or write o ation is performed at the address contai in the cursor address register or the poi address register as specified by the C The PVTC enacts the data transfers du blanking intervals in order to prevent vi disturbances of the displayed data.

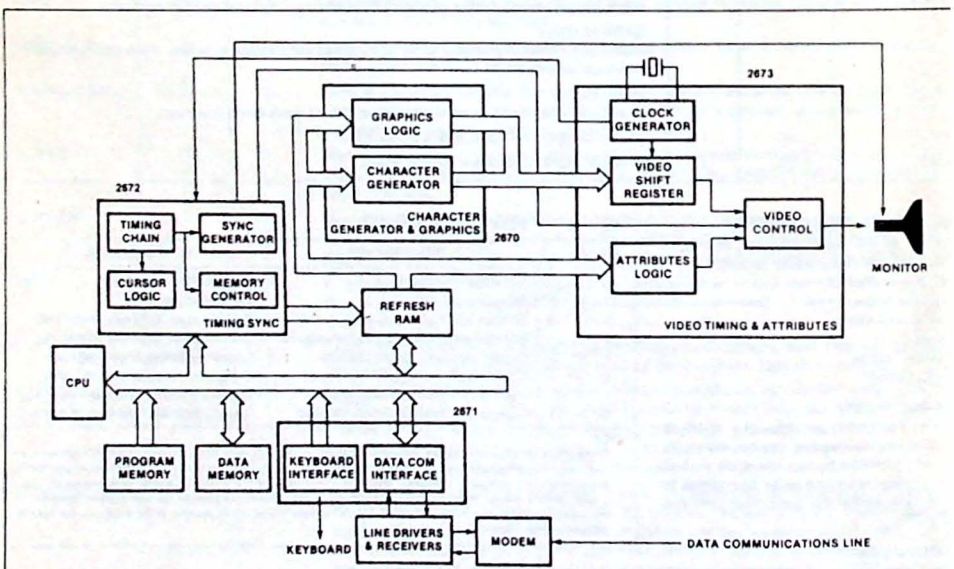

Figure 1. CRT Terminal Block Diagram

The CPU manages the data transfers by supplying commands to the PVTC. The commands used are:

1. Read/Write at pointer address.
2. Read/Write at cursor address (with optional increment of address).
3. Write from cursor address to pointer address.

The operational sequence for a write operation is:

1. CPU checks RDFLG status bit to assure that any previous operation has been completed.
2. CPU loads data to be written to display memory into the interface latch.
3. CPU writes address into cursor or pointer registers.
4. CPU issues 'write at cursor with/without increment' or 'write at pointer' command.
5. PVTC generates control signals and outputs specified address to perform requested operation. Data is copied from the interface latch into the memory.
6. PVTC sets RDFLG status to indicate that the write is completed.

Similarly, a read operation proceeds as follows:

1. Steps 1 and 3 as above.
2. CPU issues 'read at cursor with/without increment' or 'read at pointer' command.
3. PVTC generates control signals and outputs specified address to perform requested operation. Data is copied from memory to the interface latch and PVTC sets RDFLG status to indicate that the read is completed.
4. CPU checks RDFLG status to see if operation is completed.
5. CPU reads data from interface latch.

Loading the same data into a block of display memory is accomplished via the 'write from cursor to pointer' command:

1. CPU checks RDFLG status bit to assure that any previous operation has been completed.
2. CPU loads data to be written to display memory into the interface latch.

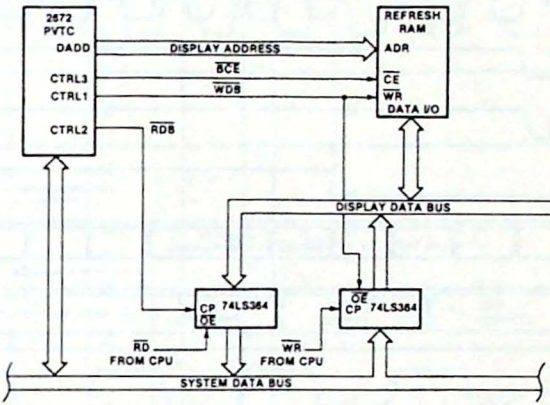

Figure 2. Independent Buffer Mode Configuration

3. CPU writes beginning address of memory block into cursor address register and ending address of block into pointer address register.
4. CPU issues 'write from cursor to pointer' command.
5. PVTC generates control signals and outputs block addresses to copy data from the interface latch into the specified block of memory.
6. PVTC sets RDFLG status to indicate that the block write is completed.

Similar sequences can be implemented on an interrupt driven basis using the READY interrupt output to advise the CPU that a previously requested command has been completed.

Two timing sequences are possible for the 'read/write at cursor/pointer' commands. If the command is given during the active display window (defined as first scan line of the first character row to the last scan line of the last character row), the operation takes place during the next horizontal blanking interval, as illustrated in figure 3. If the command is given during the vertical blanking interval, or while the display has been commanded blanked, the operation takes place immediately. In the latter case, the execution time for the command is approximately one microsecond plus six (6) character clocks (see figure 4).

Timing for the 'write from cursor to pointer' operation is shown in figure 5. The BLANK output is asserted automatically and remains asserted until the vertical retrace interval following completion of the command. The memory is filled at a rate of one location per two character times, plus a small amount of overhead.

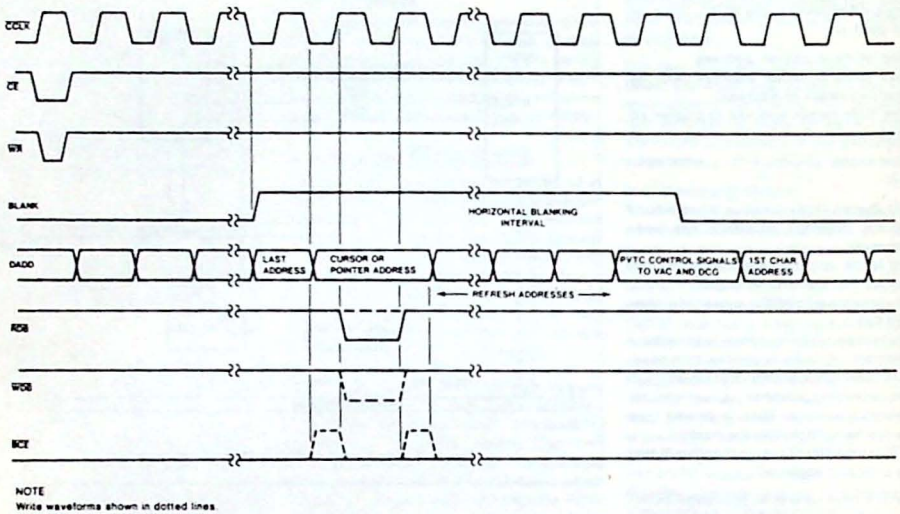

NOTE
Write waveforms shown in dotted lines.

Figure 3. Read/Write at Cursor/Pointer Command Timing (Command Received During Active Display Window)

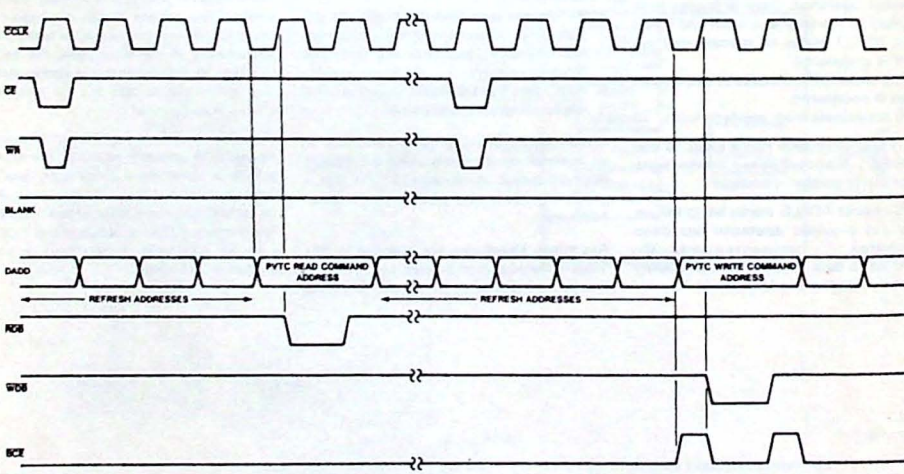

Figure 4. Read/Write at Cursor/Pointer Command Timing (Command Received While Display Is Blanked)

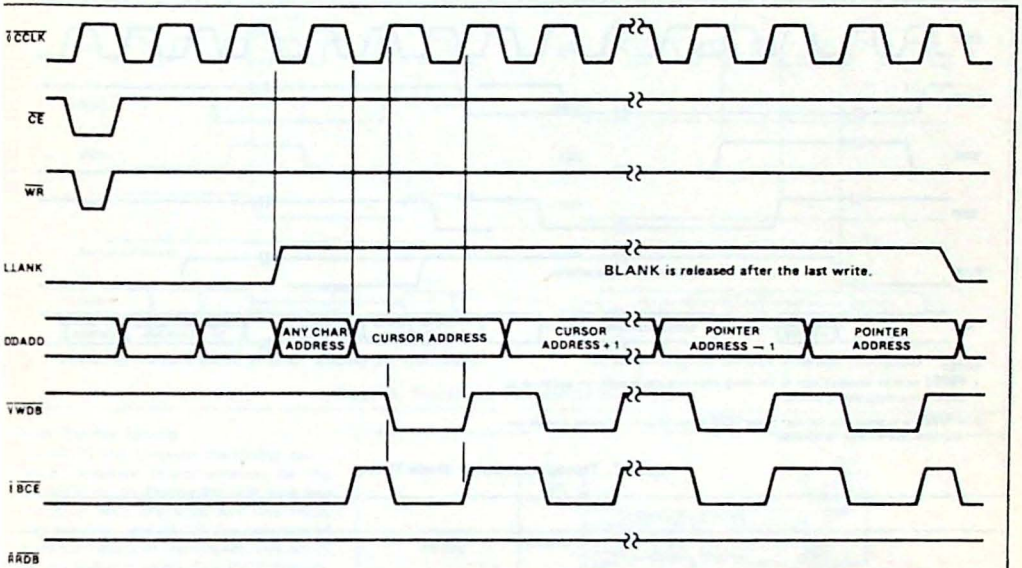

Figure 5. Write from Cursor to Pointer Command Timing

aared and Transparent Buffer ddes

ieese modes the display buffer RAM is a ı of the CPU memory domain and is ad- ssed directly by the CPU. Both modes tthe same hardware configuration with OCPU accessing the display buffer via ee-state drivers (see figure 6). The pro- sıor bus request (PBREQ) control signal rnms the PVTC that the CPU is requesting eess to the display buffer. In response to rrequest, the PVTC raises bus acknowl- es (BACK) until its bus external (BEXT))uut has freed the display address and ı busses for CPU access. BACK, which tbe used as a 'hold' input to the CPU, is ı lowered to indicate that the CPU can eess the buffer.

aansparent mode, the PVTC delays the ıtiting of the buffer to the CPU until a verti- oor horizontal blanking interval, thereby siiing minimum disturbance of the display. ıaared mode, the PVTC will blank the dis- and grant immediate access to the J.. Timing for these modes is illustrated in reas 7, 8, and 9.

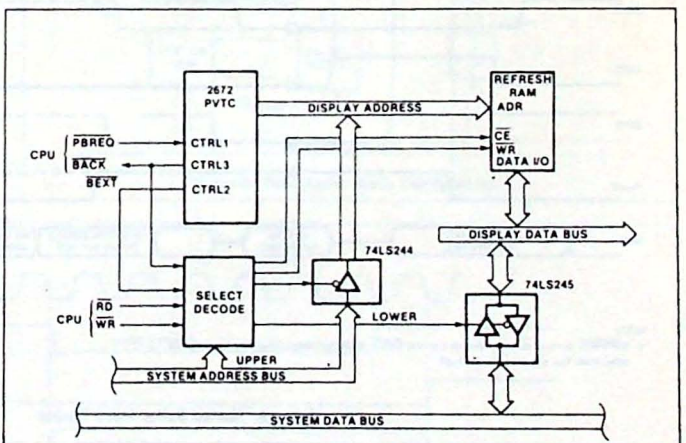

Figure 6. PVTC Shared or Transparent Buffer Modes

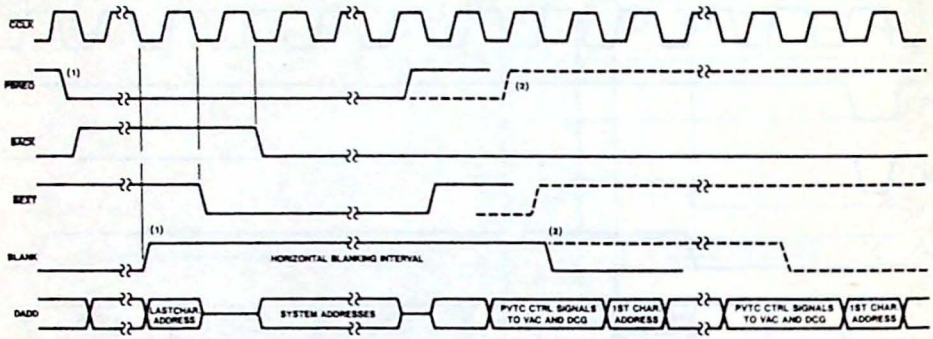

NOTES

1. $\overline{PBREQ}$ must be asserted prior to the rising edge of BLANK in order for sequence to begin during that blanking period.
2. If $\overline{PBREQ}$ is negated after the next to last $\overline{CCLK}$ of the horizontal blanking interval, the next scan line will also be blanked.

Figure 7. Transparent Buffer Mode Timing

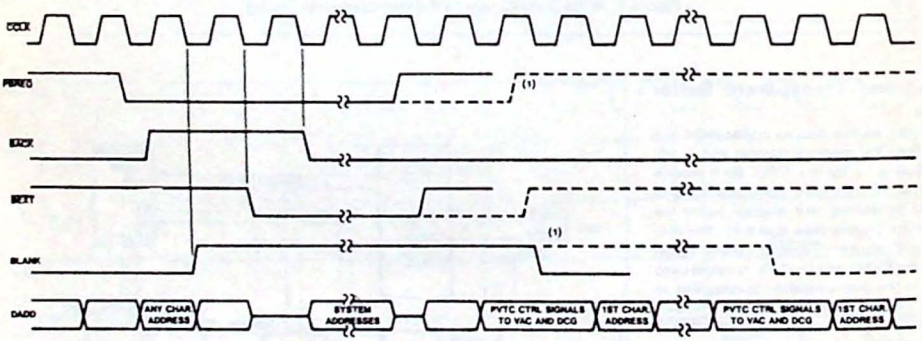

NOTE

1. If $\overline{PBREQ}$ is negated after the next to last $\overline{CCLK}$ of the horizontal blanking interval, the next scan line will also be blanked.

Figure 8. Shared Buffer Mode Timing

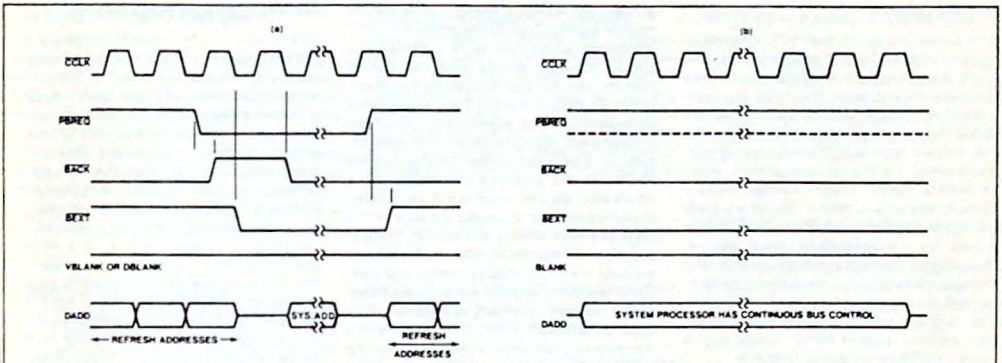

a) During Vertical Blank or after 'display off' command

b) After 'display off and 3–state' command

Figure 9. Shared and Transparent Mode Timing

Row Buffer Mode

Figures 10 and 11 show the timing and a typical hardware implementation for the row buffer mode. During the first scan line (line 0) of each character row, the PVTC halts the CPU and DMA's the next row of character data from the system memory to the row buffer memory. The PVTC then releases the CPU and displays the row buffer data for the programmed number of scan lines. The bus request control ($\overline{BREQ}$) signal informs the CPU that character addresses and the memory bus control (MBC) signal will start at the next falling edge of BBLANK. The CPU must release the address and data busses before this time to prevent bus contention. After the row of character data is transferred to the CPU, $\overline{BREQ}$ returns high to grant memory control back to the CPU.

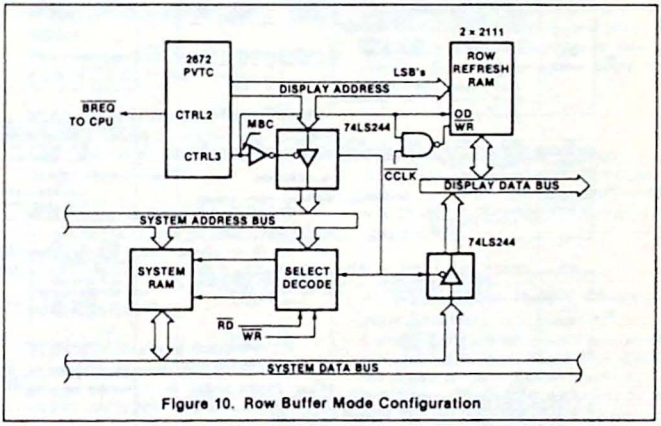

Figure 10. Row Buffer Mode Configuration

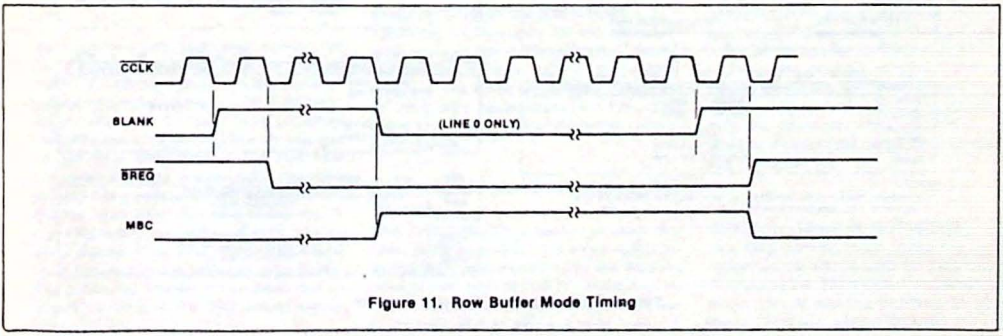

Figure 11. Row Buffer Mode Timing

OPERATION

After power is applied, the PVTC will be in an inactive state. Two consecutive 'master reset' commands are necessary to release this circuitry and ready the PVTC for operation. Two register groups exist within the PVTC: the initialization registers and the display control registers. The initialization registers select the system configuration, monitor timing, cursor shape, display memory domain, and screen format. These are loaded first and normally require no modification except for certain special visual effects. The display control registers specify the memory address of the base character (upper left corner of screen), the cursor position, and the pointer address for independent memory access mode. These usually require modification during operation.

After initial loading of the two register groups, the PVTC is ready to control the monitor screen. Prior to executing the PVTC commands which turn on the display and cursor, the user should load the display memory with the first data to be displayed. During operation, the PVTC will sequentially address the display memory within the limits programmed into its registers. The memory outputs character codes to the system character and graphics generation logic, where they are converted to the serial video stream necessary to display the data on the CRT. The user effects changes to the display by modifying the contents of the display memory, the PVTC display control and command registers, and the initialization registers, if required. Interrupts and status conditions generated by the PVTC supply the 'handshaking' information necessary for the CPU to effect the display changes in the proper time frame.

INITIALIZATION REGISTERS

There are 11 initialization registers (IR0–IR10) which are accessed sequentially via a single address. The PVTC maintains an internal pointer to these registers which is incremented after each write at this address until the last register (IR10, the split screen register) is accessed. The pointer then continues to point to the split screen register. Upon power–up or a master reset command, the internal pointer is reset to point to the first register (IR0) of the initialization register group. The internal pointer can also be preset to any register of the group via the 'load IR address pointer' command. These registers are write only and are used to specify parameters such as the system configuration, display format, cursor shape, and monitor timing. Register formats are shown in figure 12.

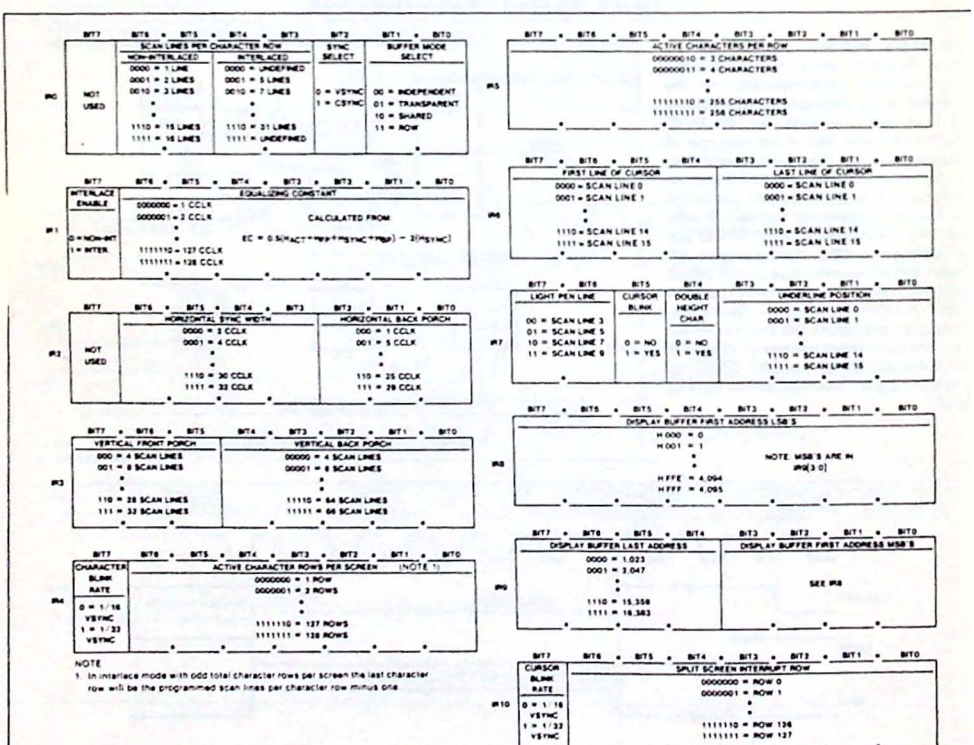

Figure 12. Initialization Register Formats

IR0[6:3]—Scan Lines per Character Row

Both interlaced and non-interlaced scanning are supported by the PVTC. For interlaced mode, two different formats can be implemented, depending on the interconnection between the PVTC and the character generator (see IR1[7]). This field defines the number of scan lines used to compose a character row for each technique. As scanning occurs, the scan line count is output on the LA0–LA3 and LI pins.

IR0[2]—VS/CS Enable

This bit selects either vertical sync pulses or composite sync pulses on the VSYNC/CSYNC output (pin 18). The composite sync waveform conforms to EIA RS170 standards, with the vertical interval composed of six equalizing pulses, six vertical sync pulses, and six more equalizing pulses.

IR0[1:0]—Buffer Mode Select

Four buffer memory modes may be selectively enabled to accommodate the desired system configuration. See System Configuration.

IR1[7]—Interlace Enable

Specifies interlaced or noninterlaced timing operation. Two modes of interlaced operation are available, depending on whether L0–L3 or LI, L0–L2 are used as the line address for the character generator. The resulting displays are shown in figure 13.

For 'interlaced sync' operation, the same information is displayed in both odd and even fields, resulting in enhanced readability. The PVTC outputs successive line numbers in ascending order on the LA0–LA3 lines, one per scan line for each field.

The 'interlaced sync and video' format doubles the character density on the screen. The PVTC outputs successive line numbers in ascending order on the LI, LA0–LA2 lines, one per scan line for each field, but alternates beginning the count with even and odd line numbers. This displays the odd field with even scan lines in even character rows and odd scan lines in odd character rows, and the even field with odd scan lines in even character rows and even scan lines on odd character rows. This provides balanced beam currents in the odd and even fields, thus minimizing character variations due to different loading of the CRT anode supply between fields.

IR1[6:0]—Equalizing Constant

This field indirectly defines the horizontal front porch and is used internally to generate the equalizing pulses for the RS170 compatible CSYNC. The value for this field is the total number of character clocks ($\overline{CCLK}$) during a horizontal line period divided by two, minus two times the number of character clocks in the horizontal sync pulse:

$$EC = \frac{H_{ACT} + H_{FP} + H_{SYNC} + H_{BP}}{2} - 2(H_{SYNC})$$

The definition of the individual parameters is illustrated in figure 14. The minimum value of H_{FP} is two character clocks.

Note that when using the 2673 VAC, the blank pulse is delayed three CCLKs relative to the HSYNC pulse.

IR2[6:3]—Horizontal Sync Pulse Width

This field specifies the width of the HSYNC pulse in $\overline{CCLK}$ periods.

IR2[2:0]—Horizontal Back Porch

This field defines the number of $\overline{CCLK}$s between the trailing edge of HSYNC and the trailing edge of BLANK.

IR3[7:5]—Vertical Front Porch

Programs the number of scan line periods between the rising edges of BLANK and VSYNC during a vertical retrace interval. The width of the VSYNC pulse is fixed at three scan lines.

IR3[4:0]—Vertical Back Porch

This field determines the number of scan line periods between the falling edges of the VSYNC and BLANK outputs.

IR4[7]—Character Blink Rate

Specifies the frequency for the character blink attribute timing. The blink rate can be specified as 1/16 or 1/32 of the vertical field rate. The timing signal has a duty cycle of 75% and is multiplexed onto the DADD11/BLINK output at the falling edge of each BLANK.

IR4[6:0]—Character Rows Per Screen

This field defines the number of character rows to be displayed. This value multiplied by the scan lines per character row, plus the vertical front and back porch values, and the vertical sync pulse width (three scan lines) is the vertical scan period in scan lines.

IR5[7:0]—Active Characters Per Row

This field determines the number of characters to be displayed on each row of the CRT screen. The sum of this value, the horizontal front porch, the horizontal sync width, and the horizontal back porch is the horizontal scan period in $\overline{CCLK}$s.

IR6[7:4], IR6[3:0]—First and Last Scan Line of Cursor

These two fields specify the height and position of the cursor on the character block. The 'first' line is the topmost line when scanning from the top to the bottom of the screen.

IR7[7:6]—Light Pen Line Position

This field defines which of four scan lines of the character row will be used for the light pen strike–thru attribute by the 2673 VAC. The timing signal is multiplexed onto the DADD9/LPL output during the falling edge of BLANK.

IR7[5]—Cursor Blink Enable

This bit controls whether or not the cursor output pin will be blinked at the selected rate (IR10[7]). The blink duty cycle for the cursor is 50%.

IR7[4]—Double Height Character Row Enable

If enabled, the number of each scan line will be repeated twice in succession, causing the height of the character row to double. This bit can be changed at any time but will only become effective at the beginning of the character row following the time it is changed. This allows selected character rows to be of double height. The split screen interrupt can be used to notify the CPU when to effectuate changes to this bit. For each double height row which replaces a normal row, one row count should be subtracted from the 'character rows per screen' field (IR4) to maintain the same total number of scan lines per field.

IR7[3:0]—Underline Position

This field defines which scan line of the character row will be used for the underline attribute by the 2673 VAC. The timing signal is multiplexed onto the DADD10/UL output during the falling edge of BLANK.

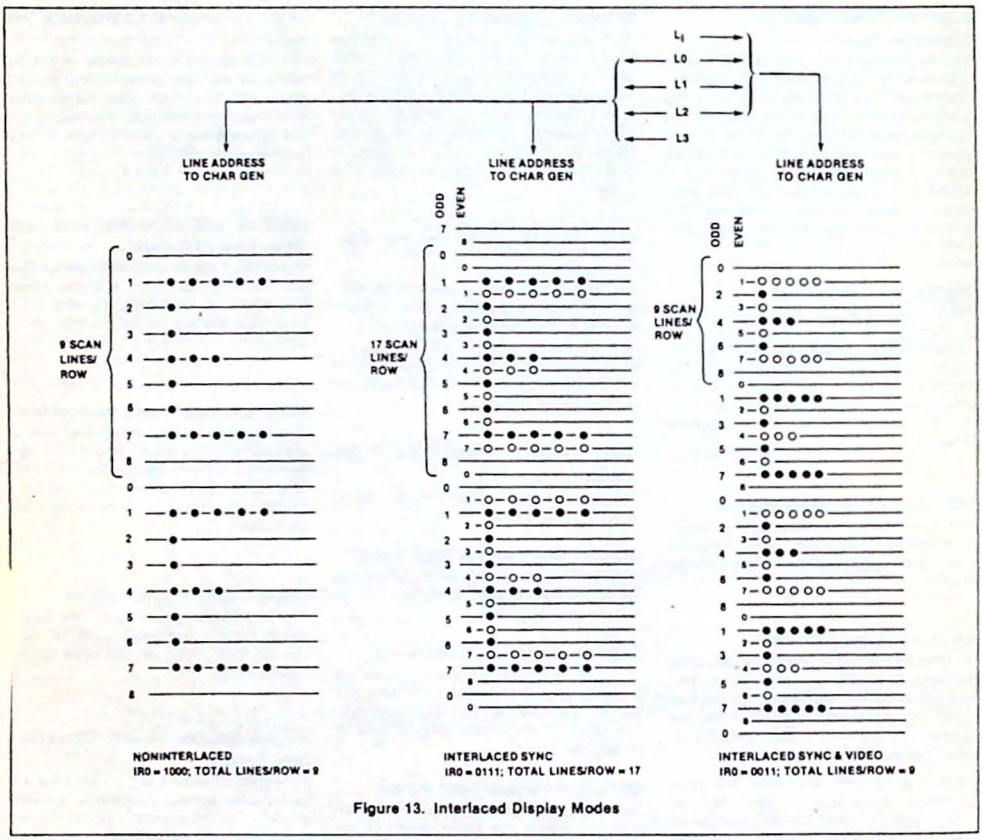

Figure 13. Interlaced Display Modes

IR9[3:0], IR8[7:0]—Display Buffer First Address

IR9[7:4]—Display Buffer Last Address

These two fields define the area within the buffer memory where the display data will reside. When the data at the 'display buffer last address' is displayed, the PVTC will wrap–around and obtain the data to be displayed at the next screen position from the 'display buffer first address'. If 'last address' is the end of a character row and a new screen start address has been loaded into the screen start register, or if 'last address' is the last character position of the screen, the next data is obtained from the address contained in the screen start register.

Note that there is no restriction in displaying data from other areas of the addressable memory. Normally, the area between these two bounds is used for data which can be overwritten (e.g., as a result of scrolling), while data that is not to be overwritten would be contained outside these bounds and accessed by means of the split screen interrupt feature of the PVTC.

IR10[7] – Cursor Blink Rate

The cursor blink rate can be specified at 1/16 or 1/32 of the vertical scan frequency. Blink is effective only if blink is enabled by IR7[5].

IR10[6:0]—Split Screen Interrupt

The split screen interrupt can be used to provide special screen effects such as a row of double height characters or to change the normal addressing sequence of the display memory. The contents of this field is compared, in real time, to the current character row number. Upon a match, the PVTC sets the split screen status bit, and issues an interrupt request if so programmed. The status change/interrupt request is made at the beginning of scan line zero of the split screen character row.

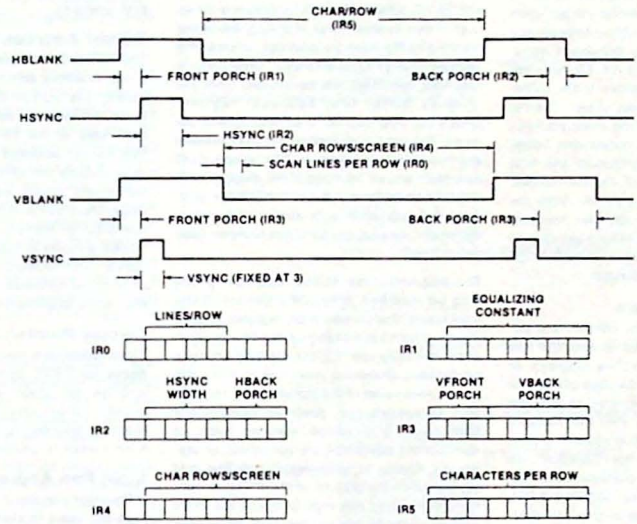

Figure 14. Horizontal and Vertical Timing

Timing Considerations

Normally, the contents of the initialization registers are not changed during operation. However, this may be necessary to implement special display features such as multiple cursors, smooth scrolling, horizontal scrolling, and double height character rows. Table 2 describes timing details for these registers which should be considered when implementing these features.

Table 2 TIMING CONSIDERATIONS

PARAMETER	TIMING CONSIDERATIONS
First line of cursor Last line of cursor Light pen line Underline	These parameters must be established at a minimum of two character times prior to their occurence.
Double height characters	Set/reset during the character row prior to the row which is to be/not to be double height
Cursor blink Cursor blink rate Character blink rate	New values become effective within one field after values are changed
Split screen interrupt row	Change anytime prior to line zero of desired row
Character rows per screen	Change only during vertical blanking period
Vertical front porch	Change prior to first line of V_{FP}
Vertical back porch	Change prior to fourth line after V_{SYNC}
Screen start register	Change prior to the horizontal blanking interval of the last line of character row before row where new value is to be used

DISPLAY CONTROL REGISTERS

There are nine registers in this group, each with an individual address. Their formats are illustrated in figure 15. The command register is used to invoke one of 16 possible PVTC commands as described in the COMMANDS section of this data sheet. The remaining registers in the group store address values which specify the cursor and buffer pointer locations, the location of the first character to be displayed on the screen, and the location of a light pen 'hit'. With the exception of the light pen register, the user initializes these registers after powering on the system and changes their values to control the data which is displayed.

Screen Start Registers

The screen start registers contain the address of the first character of the first row (upper left corner of the active display). At the beginning of the first scan line of the first row, this address is transferred to the row start register (RSR) and into the memory address counter (MAC). The counter is then advanced sequentially at the character rate the number of times programmed into the active characters per row register (IR5), thus reaching the address of the last character of the row plus one. At the beginning of each subsequent scan line of the first row, the MAC is reloaded from the RSR and the above sequence is repeated. At the end of the last scan line of the first row, the contents of the MAC is loaded into the RSR to serve as the starting memory address for the second character row. This process is repeated for the programmed number of rows per screen. Thus, the data in the display memory is displayed sequentially starting from the address contained in the screen start register. After the ensuing vertical retrace interval, the entire process repeats again.

The sequential operation described above will be modified upon the occurence of either of two events. First, if during the incrementing of the memory address counter the 'display buffer last address' (IR9[7:4]) is reached, the MAC will be loaded from the 'display buffer first address' register (IR9[3:0], IR8[7:0]) at the next character clock. Sequential operation will then resume starting from this address. This wraparound operation allows portions of the display buffer to be used for purposes other than storage of displayable data and is completely automatic without any CPU intervention (see figure 16a).

The sequential row to row addressing can also be modified under CPU control. If the contents of the screen start register (upper, lower, or both) are changed during any character row (say row 'n'), the starting address of the next character row (row 'n + 1') will be the new value of the screen start register and addressing will continue sequentially from there. This allows features such as split screen operation, partial scroll, or status line display to be implemented. The split screen interrupt feature of the PVTC is useful in controlling this type of operation. Note that in order to obtain the correct screen display, the screen start register must be reloaded with the original value prior to the end of the vertical retrace. See figure 16b.

During vertical blanking the address counter operation is modified by stopping the automatic load of the contents of the RSR into the counter, thereby allowing the address outputs to free-run. This allows dynamic memory refresh to occur during the vertical retrace interval. The refresh addressing starts at the last address displayed on the screen and increments by one for each character clock during the retrace interval. If the display buffer last address is encountered, refreshing continues from the display buffer first address.

Cursor Address Registers

The contents of these registers defines the buffer memory address of the cursor. If enabled, the cursor output will be asserted when the memory address counter matches the value of the cursor address registers. The cursor address registers may be read or written by the CPU or incremented via the 'increment cursor address' command. In independent buffer mode, these registers define a buffer memory address for PVTC controlled access in response to 'read/write at cursor with/without increment' commands, or the first address to be used in executing the 'write from cursor to pointer' command.

Display Pointer Address Registers

These registers define a buffer memory address for PVTC controlled accesses in response to 'read/write at pointer' commands. They also define the last buffer memory address to be written for the 'write from cursor to pointer' command.

Light Pen Address Registers

If the light pen input is enabled, these registers are used to store the current character address upon receipt of a light pen strobe input. Several sources of delay between the display of a character upon the screen and the receipt of a light pen hit can be expected to exist in a system environment. These delays include address pipelining in the character generation circuits, delays in the video generation circuits, and delays in the light detection circuitry itself. These delays cause the value stored in the light pen register to differ from the actual address of the character at which the light pen hit actually was detected. Software must be used to correct this condition.

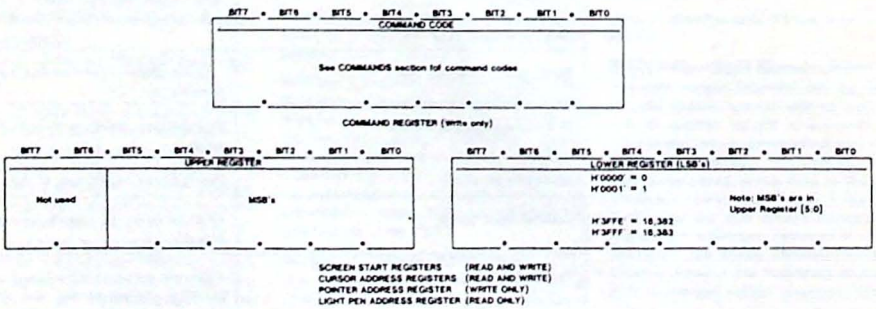

Figure 15. Display Control Register Formats

INTERRUPT/STATUS REGISTERS

The interrupt and status registers provide information to the CPU to allow it to interact with the PVTC to effect desired changes to implement various display operations. The interrupt register provides information on five possible interrupting conditions, as shown in figure 17. These conditions may be selectively enabled or disabled (masked) from causing interrupts by certain PVTC commands. An interrupt condition which is enabled (mask bit equal to one) will cause the $\overline{INTR}$ output to be asserted and will cause the corresponding bit in the interrupt register to be set upon occurrence of the interrupting condition. An interrupt condition which is disabled (mask bit equal to zero) has no effect on either the $\overline{INTR}$ output or the interrupt register.

The status register provides six bits of status information: the five possible interrupting conditions plus the NOT BUSY bit. For this register, however, the contents are not effected by the state of the mask bits.

Descriptions of each interrupt/status register bit follow. Unless otherwise indicated, a bit, once set, will remain set until reset by the CPU by issuing a 'reset interrupt/status bits' command. The bits are also reset by a 'master reset' command and upon power-up.

SR[5] – RDFLG

This bit is present in the status register only. A zero indicates that the PVTC is currently executing the previously issued command. A one indicates that the PVTC is ready to accept a new command.

I/SR[4] – VBLANK

Indicates the beginning of a vertical blanking interval. Is set to a one at the beginning of the first scan line of the vertical front porch.

I/SR[3] – Line Zero

Is set to a one at the beginning of the first scan line (line 0) of each active character row.

I/SR[2] – Split Screen

This bit is set when a match occurs between the current character row number and the value contained in the split screen interrupt register, IR10[6:0]. The equality condition is only checked at the beginning of line zero of each character row. This bit is reset when either of the screen start registers is loaded by the CPU.

I/SR[1] – Ready

Certain PVTC commands affect the display and may require the PVTC to wait for a blanking interval before enacting the command. This bit is set to one when execution of the command has been completed. No command should be invoked until the prior command is completed.

I/SR[0] – Light Pen

A one indicates that a light pen hit has occurred and that the contents of the light pen register have been updated. This bit will be reset when either of the light pen registers is read.

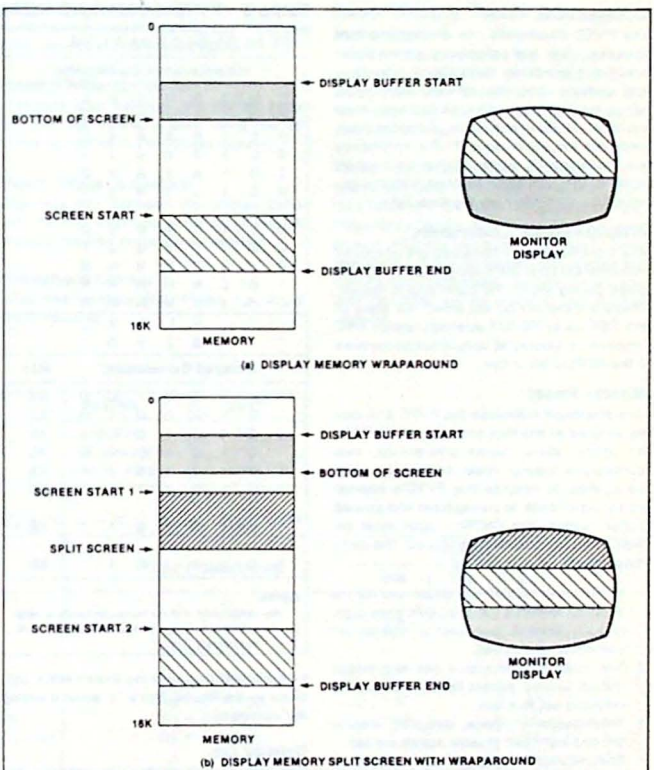

Figure 16. Display Addressing Operation

BIT7	BIT6	BIT5	BIT4	BIT3	BIT2	BIT1	BIT0
Not used always read as 0		RDFLG	VBLANK	LINE ZERO	SPLIT SCREEN	READY	LIGHT PEN
		0 = Busy 1 = Ready	0 = No 1 = Yes	0 = No 1 = Yes	0 = No 1 = Yes	0 = Busy 1 = Ready	0 = No 1 = Yes

NOTE
*Status register only. Always 0 when reading interrupt register.

Figure 17. Interrupt and Status Register Format

COMMANDS

The PVTC commands are divided into two classes: the instantaneous commands, which are executed immediately after they are invoked, and the delayed commands which may need to wait for a blanking interval prior to their execution. Command formats are shown in table 3. The commands are asserted by performing a write operation to the command register with the appropriate bit pattern as the data byte.

Instantaneous Commands

The instantaneous commands are executed immediately after the trailing edge of the $\overline{WR}$ pulse during which the command is issued. These commands do not affect the state of the RDFLG or READY interrupt/status bits. However, a command should not be invoked if the RDFLG bit is low.

Master Reset

This command initializes the PVTC and may be invoked at any time to return the PVTC to its initial state. Upon power-up, two successive master reset commands must be applied to release the PVTC's internal power on circuits. In transparent and shared buffer modes, the CNTRL1 input must be high when the command is issued. The command causes the following:

1. VSYNC and HSYNC are driven low for the duration of RESET and BLANK goes high. BLANK remains high until a 'display on' command is received.
2. The interrupt and status bits and masks are set to zero, except for the RDFLG flag which is set to a one.
3. The transparent mode, cursoroff, display off, and light pen disable states are set.
4. The initialization register pointer is set to address IR0.

Load IR Address

This command is used to preset the initialization register pointer with the value 'V' defined by D3–D0. Allowable values are 0 to 10.

Enable Light Pen

After invoking this command, receipt of a light pen strobe input will cause the light pen register to be loaded with the current buffer memory address and the corresponding interrupt and status flag to be set. Once loaded, further loads are inhibited until either one of the light pen registers are read or a reset function is performed.

Disable Light Pen

Light pen hits will not be recognized.

Display Off

Asserts the BLANK output. The DADD0 thru DADD13 display address bus outputs may be optionally placed in the three-state condition by setting bit 2 to a '1' when invoking the command.

Display On

Restores normal blanking operation either at the beginning of the next field (bit 2 = 1) or at the beginning of the next scan line (bit 2 = 0). Also returns the DADD0–DADD13 drivers to their active state.

Cursor Off

Disables cursor operation. Cursor output is placed in the low state.

Cursor On

Enables normal cursor operation.

Reset Interrupt/Status Bits

This command resets the designated bits in the interrupt and status registers. The bit positions correspond to the bit positions in the registers:

Bit 0 – Light pen
Bit 1 – Ready
Bit 2 – Split screen
Bit 3 – Line zero
Bit 4 – Vertical blank

Disable Interrupts

Sets the interrupt mask to zeros for the designated conditions, thus disabling these conditions from asserting the $\overline{INTR}$ output. Bit position correspondence is as above.

Enable Interrupts

Resets the selected interrupt and status register bits and writes the associated interrupt mask bits to a one. This enables the corresponding conditions to assert the $\overline{INTR}$ output. Bit position correspondence is as above.

Delayed Commands

This group of commands is utilized for the independent buffer mode of operation, although the 'increment cursor' command can also be used in other modes. With the exception of the 'write from cursor to pointer' and 'increment cursor' commands, all the commands of this type will be executed immediately or will be delayed depending on when the command is invoked. If invoked during the active screen time, the command is executed at the next horizontal blanking interval. If invoked during a vertical retrace interval or a 'display off' state, the command is executed immediately.

Table 3 PVTC COMMAND FORMATS

D7	D6	D5	D4	D3	D2	D1	D0	Hex	COMMAND
Instantaneous Commands:									
0	0	0	0	0	0	0	0		Master reset
0	0	0	1	V	V	V	V		Load IR pointer with value V (V = 0 to 10)
0	0	1	d	d	d	1	0[1]		Disable light pen
0	0	1	d	d	d	1	1[2]		Enable light pen
0	0	1	d	1	N	d	0[1]		Display off. Float DADD bus if N = 1
0	0	1	d	1	N	d	1[2]		Display on: Next field (N = 1) or scan line (N = 0)
0	0	1	1	d	d	d	0[1]		Cursor off
0	0	1	1	d	d	d	1[2]		Cursor on
0	1	0	N	N	N	N	N		Reset interrupt/status: Bit reset where N = 1
1	0	0	N	N	N	N	N		Disable interrupt: Disable where N = 1
0	1	1	N	N	N	N	N		Enable interrupt: Enables interrupts and resets the corresponding interrupt/status bits where N = 1
			V	L	S	R	L		
			B	Z	S	D	P		
Delayed Commands:									
1	0	1	0	0	1	0	0	A4	Read at pointer address
1	0	1	0	0	0	1	0	A2	Write at pointer address
1	0	1	0	1	0	0	1	A9	Increment cursor address
1	0	1	0	1	1	0	0	AC	Read at cursor address
1	0	1	0	1	0	1	0	AA	Write at cursor address
1	0	1	0	1	1	0	1	AD	Read at cursor address and increment address
1	0	1	0	1	0	1	1	AB	Write at cursor address and increment address
1	0	1	1	1	0	1	1	BB	Write from cursor address to pointer address

NOTES
1. Any combination of these three commands is valid.
2. Any combination of these three commands is valid.
3. d = don't care.

The 'increment cursor' and 'write from cursor to pointer' commands are executed immediately after they are issued. 'Increment cursor' requires approximately three $\overline{CCLK}$ periods for completion. 'Write from cursor to pointer' asserts the BLANK output during its execution. BLANK will be released after the last write operation. This will allow more than one 'Write from Cursor to Pointer' command to be executed during one frame and will only blank the screen for the time required to execute the command.

In all cases, the PVTC will assert the READY/RDFLG status to signify completion of the command. No other commands should be given until the current command is completed. Therefore, the READY interrupt or RDFLG status flag should be used for handshaking control between the PVTC and CPU when using these commands.

Read/Write at Pointer

Transfers data between the display buffer and the bus interface latch using the address contained in the pointer register.

Read/Write at Cursor

Transfers data between the display buffer and the bus interface latch using the address contained in the cursor register.

Increment Cursor

Adds one (modulo 16K) to the cursor address register.

Read/Write at Cursor and Increment

Transfers data between the display buffer and the bus interface latch using the address contained in the cursor register and then adds one (modulo 16K) to the cursor address register.

Write from Cursor to Pointer

Writes the data contained in the bus interface latch into the block of display memory designated by the the cursor address and pointer address registers, inclusive. After completion of the command, the pointer address will be unchanged, but the cursor register contents will be equal to the pointer address.

ABSOLUTE MAXIMUM RATINGS[1]

PARAMETER	RATING	UNIT
Operating ambient temperature[2]	0 to +70	°C
Storage temperature	−65 to +150	°C
All voltages with respect to ground[3]	−0.5 to +6.0	V

DC ELECTRICAL CHARACTERISTICS $T_A = 0°C$ to $+70°C$, $V_{CC} = 5.0V \pm 5\%$[4,5,6]

PARAMETER		TEST CONDITIONS	LIMITS			UNIT
			Min	Typ	Max	
V_{IL}	Input low voltage				0.8	V
V_{IH}	Input high voltage		2.0			V
V_{OL}	Output low voltage	$I_{OL} = 2.4mA$			0.4	V
V_{OH}	Output high voltage (except $\overline{INTR}$ output)	$I_{OH} = -200\mu A$	2.4			V
I_{IL}	Input leakage current	$V_{IN} = 0$ to V_{CC}	−10		10	μA
I_{LL}	Data bus 3−state leakage current	$V_O = 0$ to V_{CC}	−10		10	μA
I_{OD}	$\overline{INTR}$ open drain output leakage current	$V_O = 0$ to V_{CC}			10	μA
I_{CC}	Power supply current				160	mA

NOTES
See next page

AC ELECTRICAL CHARACTERISTICS $T_A = 0°C$ to $+70°C$, $V_{CC} = 5.0V \pm 5\%$ [4,5,6,7,8]

PARAMETER		TEST CONDITIONS	LIMITS				UNIT
			2.7MHz		4.0MHz		
			Min	Max	Min	Max	
Bus Timing (Fig. 18)[9]							
t_{AS}	A0-A2 setup time to $\overline{WR}$, $\overline{RD}$ low		30		30		ns
t_{AH}	A0-A2 hold time from $\overline{WR}$, $\overline{RD}$ high		0		0		ns
t_{CS}	$\overline{CE}$ setup time to $\overline{WR}$, $\overline{RD}$ low		0		0		ns
t_{CH}	$\overline{CE}$ hold time from $\overline{WR}$, $\overline{RD}$ high		0		0		ns
t_{RW}	$\overline{WR}$, $\overline{RD}$ pulse width		250		250		ns
t_{DD}	Data valid after $\overline{RD}$ low			200		200	ns
t_{DF}	Data bus floating after $\overline{RD}$ high			100		100	ns
t_{DS}	Data setup time to $\overline{WR}$ high		150		150		ns
t_{DH}	Data hold time from $\overline{WR}$ high		10		5		ns
t_{CC}	High time from $\overline{CE}$ to $\overline{CE}$[10]						
	Consecutive commands		600		600		ns
	Other accesses		300		300		ns
$\overline{CCLK}$ Timing (Fig. 19)							
t_{CCP}	$\overline{CCLK}$ period		370		250		ns
t_{CCH}	$\overline{CCLK}$ high time		125		100		ns
t_{CCL}	$\overline{CCLK}$ low time		125		100		ns
t_{CCD}[12]	Output delay from $\overline{CCLK}$ edge						
	DADD0-13, MBC		40	175	40	150	ns
	BLANK, HSYNC, VSYNC/CSYNC, CURSOR, $\overline{BEXT}$, $\overline{BREQ}$, $\overline{BACK}$, $\overline{BCE}$, $\overline{WDB}$, $\overline{RDB}$[11]		40	225	40	200	ns
Other Timings (Fig. 20)							
t_{RDL}	READY/RDFLG low from $\overline{WR}$ high[9]			t_{CCP} + 30		t_{CCP} + 30	ns
t_{BAK}	$\overline{BACK}$ high from $\overline{PBREQ}$ low			225		200	ns
t_{BXT}	$\overline{BEXT}$ high from $\overline{PBREQ}$ high			225		200	ns
t_{LPS}	Light pen strobe setup time to $\overline{CCLK}$ low		120		120		ns
t_{LPH}	Light pen strobe hold time from $\overline{CCLK}$ low		−10		−10		ns
t_{IRL}	$\overline{INTR}$ low from $\overline{CCLK}$ low			225		200	ns
t_{IRH}	$\overline{INTR}$ high from $\overline{WR}$, $\overline{RD}$ high[9]			600		600	ns

NOTES

1. Stresses above those listed under Absolute Maximum Ratings may cause permanent damage to the device. This is a stress rating only and functional operation of the device at these or at any other condition above those in the operation section of this specification is not implied.
2. For operating at elevated temperatures, the device must be derated based on +150°C maximum junction temperature.
3. This product includes circuitry specifically dsigned for the protection of its internal devices from damaging effects of excessive static charge. Nonetheless, it is suggested that conventional precautions be taken to avoid applying voltages greater than the rated maxima.
4. Parameters are valid over specified temperature range.
5. All voltage measurements are referenced to ground (GND).
6. Typical values are at +25°C, typical supply voltages and typical processing parameters.
7. For testing, all input signals swing between 0.4V and 2.4V with a transition time of 20ns maximum. All time measurements are referenced at input voltages of 0.8V and 2.0V and output voltages of 0.8V and 2.0V as appropriate.
8. Test condition for outputs. $C_L = 150pF$.
9. Timing is illustrated and specified referenced to $\overline{WR}$ and $\overline{RD}$ inputs. Device may also be operated with $\overline{CE}$ as the 'strobing' input. In this case, all timing specifications apply referenced to falling and rising edges of $\overline{CE}$.
10. This specification requires that the $\overline{CE}$ input be negated (high) between read and/or write cycles.
11. $\overline{BCE}$, $\overline{WDB}$, and $\overline{RDB}$ delays track each other within 10nsec. Also, these output delays will tend to follow direction (min/max) of DADD0-13 delays.
12. These values were measured with a capacitance load of 150pF. To adjust the output delay, use the following correction factor: $50pF \le C_L < 150pF$:−0.15ns/pF.

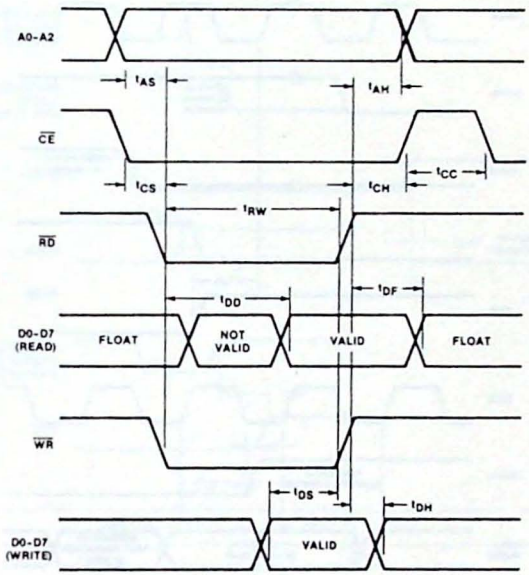

Figure 18. Bus Timing

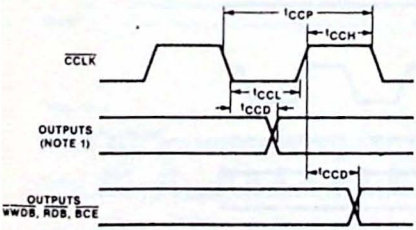

NOTES

1. DADD0-DADD13, BLANK, HSYNC, CSYNC/VSYNC, CURSOR, $\overline{BEXT}$, $\overline{BREQ}$, $\overline{BCE}$, MBC, BACK
2. $\overline{BCE}$ changes state on both $\overline{CCLK}$ edges—(see Figures 3 and 4).

Figure 19. $\overline{CCLK}$ Timing

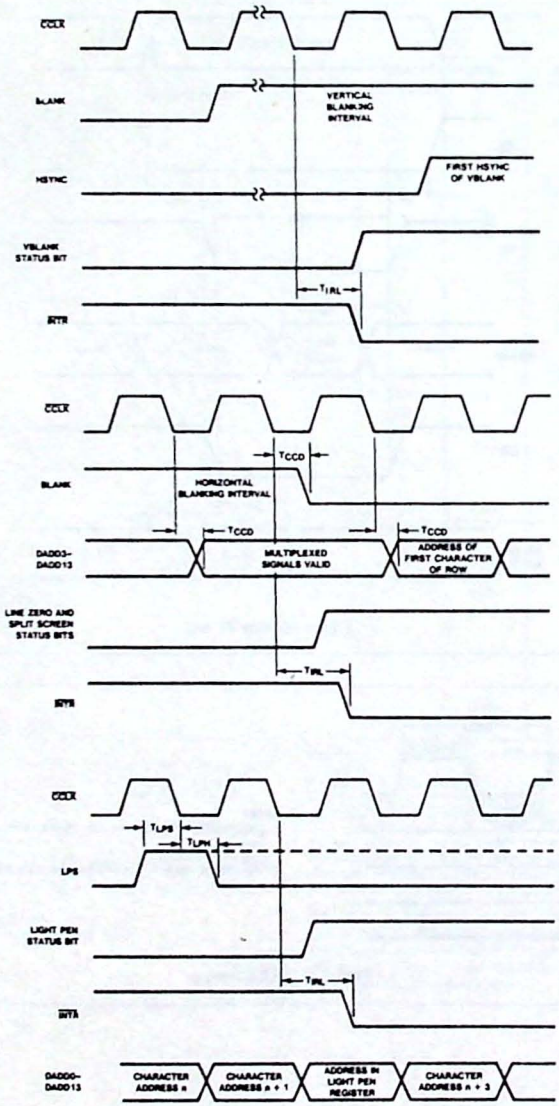

Figure 20. Other Timings

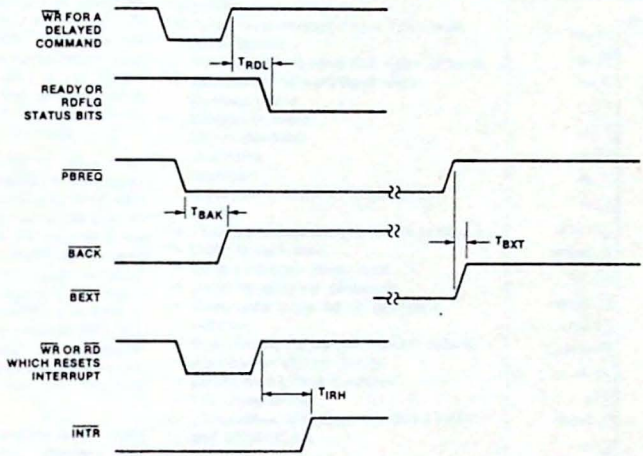

Figure 21. Other Timings

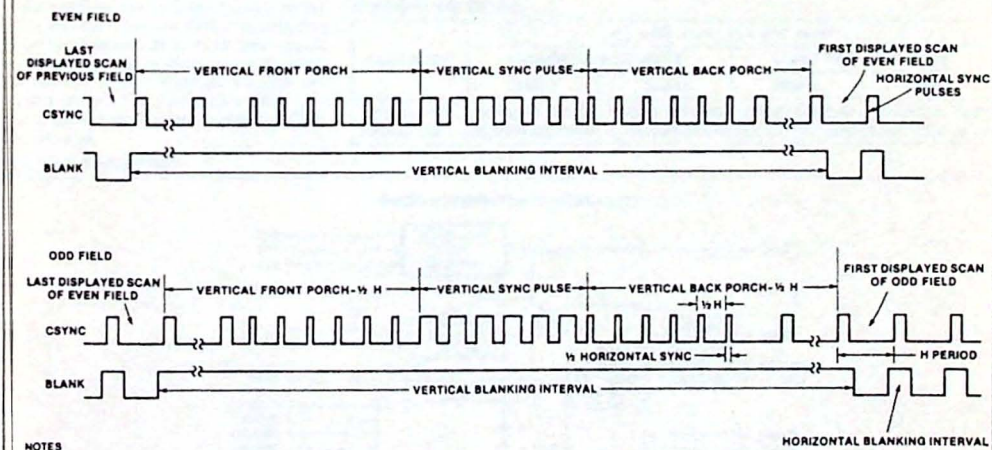

NOTES

1. In non-interlaced operation the even field is repeated continuously, and the odd field is not.
2. In interlaced operation the even field alternates with the odd field.

Figure 22. Composite Sync Timing

VIDEO ATTRIBUTES CONTROLLER (VAC) SCB2673

DESCRIPTION

The Signetics 2673A and 2673B Video Attributes Controllers (VAC) are bipolar LSI devices designed for CRT terminals and display systems that employ raster scan techniques. Each contains a high speed video shift register, field and character attributes logic, attribute latch, cursor format logic and half dot shift control.

The VAC provides control of visual attributes on a field or character by character. Internal logic preserves field attribute data from character row to character row so that an attribute byte is not required at the beginning of each row. The 2673B provides for reverse video, blank (non-display), blink, underline and highlight attributes and a graphics mode attribute to work in conjunction with the Signetics 2670 Display Character and Graphics Generator (DCGG). The 2673A substitutes a light pen (strike-thru) attribute for the graphics attribute.

The horizontal dot frequency is the basic timing input to the VAC. Internally, this clock is divided down to provide a character clock output for system synchronization. Up to ten bits of video dot data are parallel loaded into the video shift register on each character boundary. The video data is shifted out on three outputs at the dot frequency. On the VIDEO output, the data is presented as a three level signal representing low, medium and high intensities. The three intensities are also encoded on two TTL compatible video outputs. Light or dark screen background can be selected.

FEATURES

- **25MHz video dot rate**
- **Three level current driven (75 ohms) video output**
- **Three level encoded TTL video outputs**
- **Character/field attribute logic**
  Reverse video
  Character blank
  Character blink
  Underline
  Highlight
  Light pen strike-thru or graphics control
- **Field attributes extend from row to row**
- **Light or dark field**
- **Cursor reverse video logic**
- **Up to 10 dots per character**
- **Composite blanking for light field retrace**
- **Optional field graphics control output**
- **High speed bipolar design**
- **40 pin dual in-line package**
- **TTL compatible**
- **Compatible with Signetics 2672 PVTC and 2670 DCGG**

APPLICATIONS

- **CRT terminals**
- **Word processing systems**
- **Small business computers**

PIN CONFIGURATION

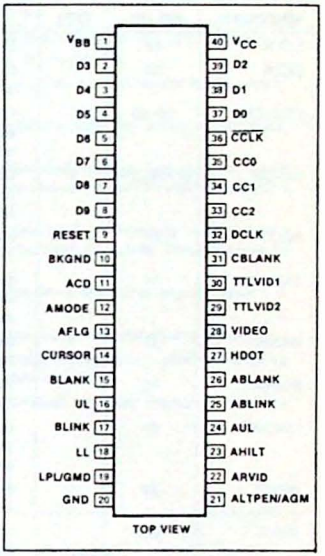

ORDERING CODE

PACKAGES	V_{CC} = 5V ± 5%, T_A = 0°C to 70°C			
	GRAPHICS ATTRIBUTE		LIGHT PEN ATTRIBUTE	
	25MHz	18MHz	25MHz	18MHz
Ceramic DIP	SCB2673BC5I40	SCB2673BC8I40	SCB2673AC5I40	SCB2673AC8I40
Plastic DIP	SCB2673BC5N40	SCB2673BC8N40	SCB2673AC5N40	SCB2673AC8N40

BLOCK DIAGRAM

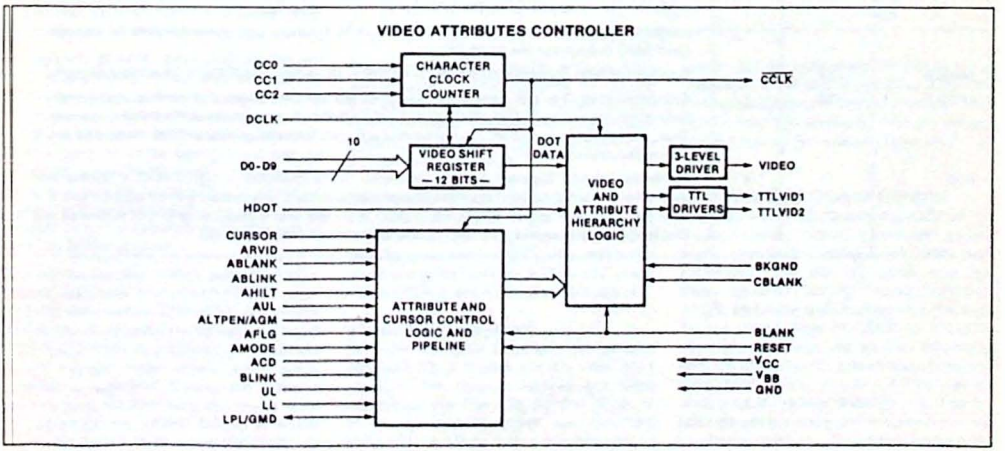

VIDEO ATTRIBUTES CONTROLLER (VAC) SCB2673

PIN DESIGNATION

MNEMONIC	PIN NO.	TYPE	NAME AND FUNCTION
DCLK	32	I	**Dot Clock:** Dot frequency input. Video output shift rate.
$\overline{CCLK}$	36	O	**Character Clock:** A submultiple of DCLK. The frequency ranges from one sixth to one twelfth of DCLK, as determined by the state of the CC0-CC2 inputs.
CC2-CC0	33-35	I	**Character Clock Control:** The logic state on these three static inputs determine the internal divide factor for the $\overline{CCLK}$ output rate. Character clock rates of 6 thru 12 dots per character may be specified.
D0-D9	37-39, 2-8	I	**Dot Data Input:** These are parallel inputs corresponding to the character/graphic symbol dot data for a given scan line. These inputs are strobed into the video shift register on the falling edge of each character clock.
HDOT	27	I	**Half Dot Shift:** When this input is high, the serial video output is delayed by one half dot time. This input is latched on the falling edge of each character clock.
CURSOR	14	I	**Cursor Timing:** This input provides the timing for the cursor video. When high, effectively reverses the intensities of the video and attributes. Cursor position, shape, and blink rate are controlled by this input.
BKGND	10	I	**Background Intensity:** Specifies light or dark video during BLANK and character fields. Affects the intensities of all attributes.
BLANK	15	I	**Screen Blank:** When high, this input forces the video outputs to the level specified by the BKGND input (either high or low intensity). Not effective when CBLANK is high.
CBLANK	31	I	**Composite Blank:** Used with the TTL video outputs only. When high, this input forces the video outputs to a low intensity state for retrace blanking. When BKGND input is low, or when using video outputs, this input may be tied low.
ARVID	22	I	**Reverse Video Attribute:** The intensity of the associated character or field video is reversed. All other attributes are effectively reversed.
AHILT	23	I	**Highlight Attribute:** All dot video (including underline) of the associated character or field is highlighted with respect to the BKGND input and the reverse video attribute.
ABLANK	26	I	**Blank Attribute:** Generates a blank space in the associated character or field. The blank space intensity is determined by the BKGND input, the reverse video attribute, and the CURSOR input.
ABLINK	25	I	**Blink Attribute:** The associated character or field video is driven to the intensity determined by BKGND and the reverse video attribute when the BLINK input is high.
AUL	24	I	**Underline Attribute:** Specifies a line to be displayed on the character or field. The line is specified by the UL input. All other attributes apply to the underline video.
ALTPEN/AGM	21	I	**Light Pen Attribute (2673A):** Specifies a highlighted line to be displayed on the character or field. The line is specified by the LPL input.
		I	**Attribute Graphics Mode (2673B):** This input is latched and synchronized to provide a field GMD output for the 2670 DCGG.
AMODE	12	I	**Attribute Mode:** Specifies character (AMODE = 0) or field (AMODE = 1) attributes mode.
AFLG	13	I	**Attributes Flag:** The VAC samples and latches the attributes inputs when this input is high. If field attributes are specified (AMODE = 1), the attributes are double buffered on a row basis. Thus, each scan line of every character row will start with the attributes that were valid at the end of the previous row.
ACD	11	I	**Attribute Control Display:** In field attributes mode (AMODE = 1), if ACD = 0, the first character in each new attribute field (the attribute control character) will be suppressed and only the attributes will be displayed. If ACD = 1, the first character and the attributes are displayed. This input has no effect in character mode (AMODE = 0).

PIN DESIGNATION (continued)

MNEMONIC	PIN NO.	TYPE	NAME AND FUNCTION
BLINK	17	I	**Blink:** This input is sampled on the falling edge of BLANK to provide the blink rate for the character blink attribute. It should be a submultiple of the frame rate.
UL	16	I	**Underline:** Indicates the scan line(s) for the underline attribute. Latched on the falling edge of BLANK.
LPL/GMD	19	I	**Light Pen Line (2673A):** Indicates the scan line(s) for the light pen strike-thru attribute. Latched on the falling edge of BLANK.
		O	**Graphics Mode (2673):** This output provides a synchronized, latched, field graphics mode corresponding to the AGM input. This output can be used to control the GM input on the 2670 DCGG.
LL	18	I	**Last Line:** Indicates the last scan line of each character row. Used internally to extend field attributes across row boundaries. Latched on the falling edge of BLANK. This input has no effect in character mode (AMODE = 0).
VIDEO	28	O	**Video:** A three level serial video output which corresponds to the composite dot pattern of characters, attributes and cursor.
TTLVID1	30	O	**TTL Video 1:** This output corresponds to the serial, non-highlighted video dot pattern.
TTLVID2	29	O	**TTL Video 2:** This output corresponds to the highlighted serial video dot pattern. Should be used with TTLVID1 to decode a composite video of three intensities.
RESET	9	I	**Manual Reset:** This active high input initializes the internal logic and resets the attribute latches.
V_{CC}	40	I	**Power Supply:** +5 Volts ± 5%
V_{BB}	1	I	**Bias Supply:** See figure 13.
GND	20	I	**Ground:** 0V reference

IFUNCTIONAL DESCRIPTION

TThe VAC consists of four major sections ((see block diagram). The high speed dot cclock input is divided internally to provide aa character clock for system timing. The pparallel dot data is loaded into the video sshift register on each character boundary aand shifted into the video logic block at tthe dot rate. The six attribute inputs are llatched internally and combined with the sserial dot data to provide a three level vvideo source for the monitor.

AA separate BLANK input defines the actitive screen area. When BLANK = 0, the vvideo levels are derived internally by the ccombinations of dot data, attributes, cursor, and the state of the BKGND input. EEither black or white background can be sselected. Symbols (dot data) are normally ggray and can be highlighted to white or bblack as shown in figure 1. Note that the VVIDEO output is inverted as referenced to tthe TTL video outputs.

DDuring the inactive screen area (BLANK = 1)((, the video level produced by the TTL outpouts is either white (BKGND = 1) or black (BBKGND = 0). A separate composite blank (CCBLANK) input is provided to suppress raaster retrace video when white backgground is specified. During the inactive sscreen area (BLANK = 1), the video level pproduced by the VIDEO output is either bblack (BKGND = 1) or white (BKGND = 0).

CC2	CC1	CC0	$\overline{CCLK}$ DOTS/CHARACTER	$\overline{CCLK}$ DUTY CYCLE
0	0	0	6	3/3
0	0	1	6	3/3
0	1	0	7	4/3
0	1	1	8	4/4
1	0	0	9	5/4
1	0	1	10	5/5
1	1	0	11	6/5
1	1	1	12	6/6

For the latter case, raster retrace video suppression is accomplished by raising the BKGND input during horizontal and vertical retrace intervals. For black background, tie BKGND high. Tie CBLANK input low for both cases.

Character Clock Counter

The character clock counter divides the frequency on the DCLK input to generate the character clock ($\overline{CCLK}$). The divide factor is specified by the clock control inputs (CC0-CC2) as shown in the table above.

Video Shift Register

On each character boundary, the parallel data (D0-D9) is loaded into the video shift register. The data is shifted out least significant bit first (D0) by the DCLK. If 11 or 12 dots/character are specified (CC2-CC0 = 110 or 111), a 0 (blank dot) is always shifted out before D0. For 12 dots/character, a 0 is also shifted out after D9. The serial dot data is shifted into the video logic where it is combined with the cursor and attributes to encode three levels of video.

Attribute and Cursor Control

The VAC visual attributes capabilities include: reverse video, character blank, blink, underline, highlight, and light pen strike-thru. The six attributes and the three attribute control inputs (AMODE, AFLG, and ACD) are clocked into the VAC on the falling edge of $\overline{CCLK}$. If AFLG is high, the attributes are latched internally and are effective for either one character time (AMODE = 0) or until another set of attributes is latched (AMODE = 1). The attributes set is double buffered on a row by row basis internally. Using this technique,

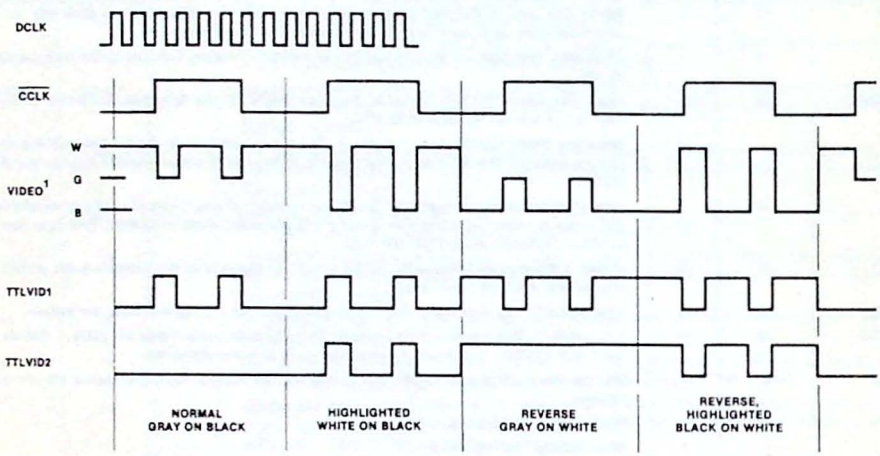

NOTE
1. W = White
G = Gray
B = Black

Figure 1. Encoded Video Outputs

field attributes can extend across character row boundaries thereby eliminating the necessity of starting each row with an attribute set.

When field attribute mode is selected, (AMODE = 1), the VAC will accommodate two attribute storage configurations. In one configuration, the attribute control data is stored in the refresh RAM, taking the place of the first character code in the field to be affected. For this mode, the ACD input is tied low and blank characters will be displayed in the screen positions occupied by the attribute data (see figure 10). In the second configuration, (ACD = 1), the character codes and attribute data are presented to the VAC in parallel. In this mode, dot data is displayed at each character position (see figure 11).

The CURSOR and the attribute input signals are pipelined internally to allow for system propagations (one $\overline{CCLK}$ for refresh RAM, one $\overline{CCLK}$ for dot generator). The attribute timing signals BLINK, UL, LPL and LL are clocked into the VAC at the beginning of each scan line by the falling edge of the BLANK input. Thus, these signals must be in their proper state at the falling edge of BLANK preceding the scan line at which they are to be active (see figure 4).

TTLVID2	TTLVID1	INTENSITY
0	0	Black (or CBLANK)
0	1	Gray (on black surround)
1	0	Gray (on white surround)
1	1	White

NOTE
The TTLVID1 output can be used independently to generate a two level non-highlighted video.

Video Logic

The serial dot data and the pipelined cursor and attributes are combined to generate the three level current source on the VIDEO output. The three levels (white, gray, and black) are also encoded on the two TTL compatible outputs TTLVID1 and TTLVID2. The three levels are encoded as shown above.

The video is normally shifted out on the leading edge of the DCLK. When the HDOT input is asserted, the corresponding dot data is delayed by one-half DCLK. This half dot shifting, when used on selected lines of character video, can be used to effect eye-pleasing character rounding as shown in figure 2.

Attribute Hierarchy

The video of each character block consists of four components as shown in figure 3.

Symbol video is generated from the d data inputs D0–D9.

Underline video is enabled by the AL attribute and is generated when the L timing input is active. Underline and sy bol video are always the same intensity.

Strike-thru video is enabled by the ALTPE attribute and is generated when the LF timing input is active. This video is alwa highlighted and takes precedence over th symbol and underline video. This featu applies to the 2673A only.

Surround video is the absence of symb underline and strike-thru video or th presence of the non-display attribute (ABLANK or ABLINK • BLINK).

The relative intensities of the four vide components are determined by the r maining attributes (AHILT, ABLAN ABLINK, ARVID) and the BKGND ar CURSOR inputs as illustrated in table 1

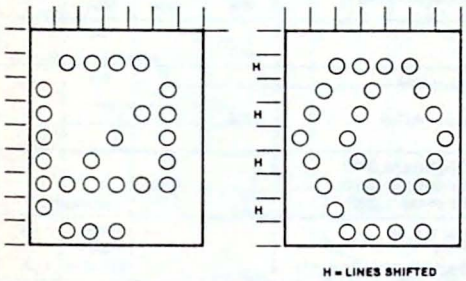

Figure 2. "AT" Symbol with and without Half Dot Shifting

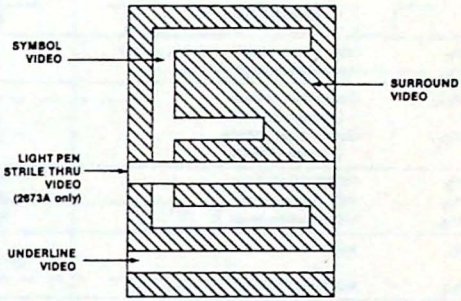

Figure 3. Video Components of Character Block

Table 1 ATTRIBUTES HIERARCHY

ATTRIBUTES AND CONTROL INPUTS d = don't care				RELATIVE VIDEO INTENSITIES W = White, B = Black, G = Gray		
BKGND[5]	REVERSE[1]	NON-DISPLAY[2]	AHILT	STRIKE THRU VIDEO[3]	SYMBOL OR UNDERLINE VIDEO[3,4]	SURROUND VIDEO[3]
0	0	0	0	W	G	B
0	0	0	1	W	W	B
0	0	1	d	B	B	B
0	1	0	0	B	G	W
0	1	0	1	B	B	W
0	1	1	d	W	W	W
1	0	0	0	B	G	W
1	0	0	1	B	B	W
1	0	1	d	W	W	W
1	1	0	0	W	G	B
1	1	0	1	W	W	B
1	1	1	d	B	B	B

NOTES
1. Reverse = ARVID • $\overline{\text{CURSOR}}$ + $\overline{\text{ARVID}}$ • CURSOR
2. Non-display = ABLANK + ABLINK • BLINK
3. See figure 3
4. Symbol and underline video are always the same intensity.
5. Reverse sense for VIDEO output.

ABSOLUTE MAXIMUM RATINGS[1]

PARAMETER	RATING	UNIT
Operating ambient temperature[2]	0 to +70	°C
Storage temperature	−65 to +150	°C
All voltages with respect to ground	−0.5 to +6.0	V

NOTES
1. Stresses above those listed under Absolute Maximum Ratings may cause permanent damage to the device. This is a stress rating only and functional operation of the device at these or at any other condition above those indicated in the operation section of this specification is not implied.
2. For operating at elevated temperatures, the device must be derated based on +150°C maximum junction temperature.

DC ELECTRICAL CHARACTERISTICS $T_A = 0°C$ to $+70°C$, $V_{CC} = 5V \pm 5\%$, V_{BB} = See figure 13[3,4,5]

PARAMETER		TEST CONDITIONS	LIMITS Min	LIMITS Typ	LIMITS Max	UNIT
V_{IL}	Input low voltage				0.8	V
V_{IH}	Input high voltage		2.0			V
V_{OL}	Output low voltage (except VIDEO)	$I_{OL} = 4mA$			0.4	V
V_{OH}	Output high voltage (except VIDEO)	$I_{OH} = -400\mu A$	2.4			V
V_B	VIDEO black level	R_L = 150 ohms to GND		0		V
V_G	VIDEO gray level	R_L = 150 ohms to GND		0.45		V
V_W	VIDEO white level	R_L = 150 ohms to GND		0.90		V
I_{IL}	Input low current	$V_{IN} = 0.4V$			−400/ −800[10]	μA
I_{IH}	Input high current	$V_{IN} = 2.4V$			20/40[10]	μA
I_{CC}	V_{CC} supply current	$V_{IN} = 0V$, V_{CC} = max			80	mA
I_{BB}	V_{BB} supply current	V_{BB} = max			120	mA

AC ELECTRICAL CHARACTERISTICS $T_A = 0°C$ to $+70°C$, $V_{CC} = 5V \pm 5\%$, V_{BB} = See figure 13[3,4,5]

PARAMETER		TEST CONDITIONS	LIMITS 25MHz VERSION Min	LIMITS 25MHz VERSION Max	LIMITS 18MHz VERSION Min	LIMITS 18MHz VERSION Max	UNIT
Dot clock[6]							
f_D	frequency			25		18	MHz
t_{DH}	high		15		22		ns
t_{DL}	low		15		22		ns
Setup times to $\overline{CCLK}$[7]							
t_{BS}	BLANK		50		50		ns
t_{SC}	BLINK, UL, LPL, LL (ref to BLANK)		20		20		ns
t_{SA}	Attributes		45		55		ns
t_{SD}	Dot data D0-D9		70		70		ns
t_{SK}	CURSOR		50		50		ns
t_{FS}	AFLG		50		65		ns
t_{SH}	HDOT		45		55		ns
Hold times from $\overline{CCLK}$[7]							
t_{HC}	BLINK, UL, LPL, LL (ref to BLANK)		20		20		ns
t_{HA}	Attributes		20		20		ns
t_{HD}	Dot data D0-D9		30		30		ns
t_{HK}	CURSOR		20		20		ns
t_{FH}	AFLG		30		30		ns
t_{HH}	HDOT		20		20		ns
Setup times to DCLK[8]							
t_{SG}	BKGND		15		15		ns
t_{SB}	CBLANK		15		15		ns
Hold times from DCLK[8]							
t_{HG}	BKGND		15		15		ns
t_{HB}	CBLANK		15		15		ns
Delay times[9]		C_L = 150pF					
t_{DGM}	GMD from DCLK			65		65	ns
t_{DC}	CCLK from DCLK			65		65	ns
t_{DV}[11]	TTLVID1 and TTLVID2 from DCLK		45	75	45	80	ns
t_{DV}	VIDEO from DCLK			240		240	ns

NOTES

3. Parameters are valid over operating temperature range unless otherwise specified.
4. All voltage measurements are referenced to ground (V_{SS}). All input signals swing between 0.4V and 2.4V. All time measurements are referenced at input voltages of 0.8V, 2.0V and at output voltages of 0.8V, 2.0V as appropriate.
5. Typical values are at +25°C, typical supply voltages and typical processing parameters.
6. See figure 9.
7. See figures 4, 5, 6, and 9.
8. See figure 8.
9. See figures 6 and 7.
10. For DCLK input.
11. C_L less than 150pF minimum could be faster.

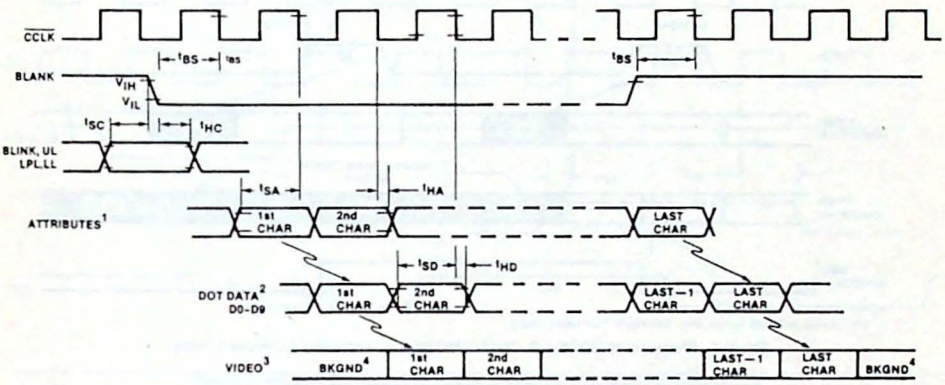

NOTES
1. Attributes include: ABLINK, ABLANK, ARVID, AUL, AHLT, and ALTPEN.
2. One $\overline{CCLK}$ delay for dot data (obtained from delay through character generator).
3. See figure 7 for detail timing of VIDEO, TTLVID1, TTLVID2.
4. Non-active scan time. VIDEO reverts to polarity selected by the BKGND input.

Figure 4. VAC Pipeline Timing

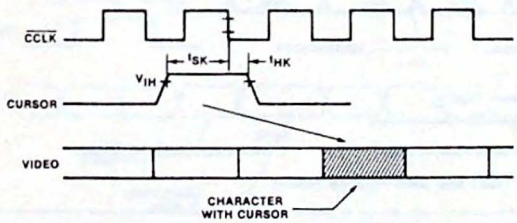

Figure 5. Cursor Pipeline Timing

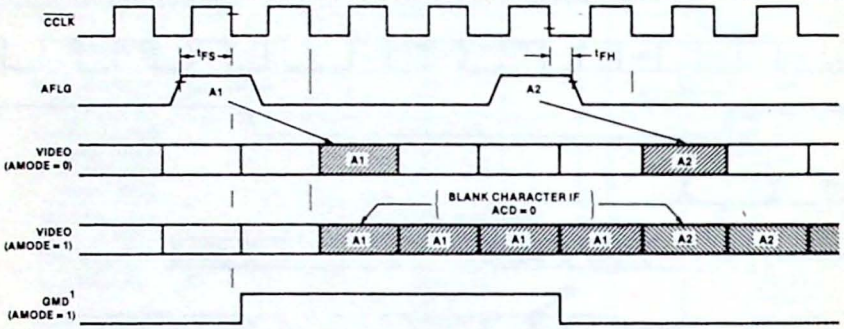

NOTE
1. GMD output in 2673B version only. See figure 7 for detail timing.

Figure 6. Character (AMODE = 0), Field (AMODE = 1), and GMD Attribute Timing

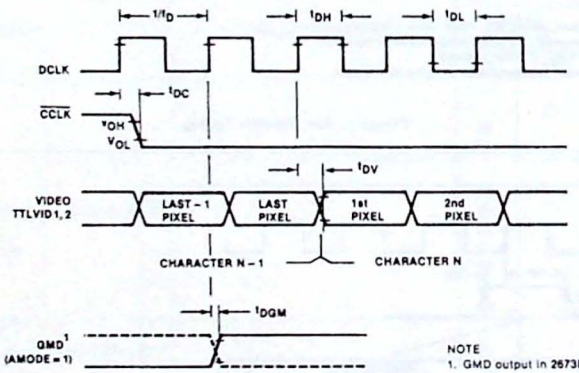

NOTE
1. GMD output in 2673B version only.

Figure 7. Video and GMD Pipeline Timing

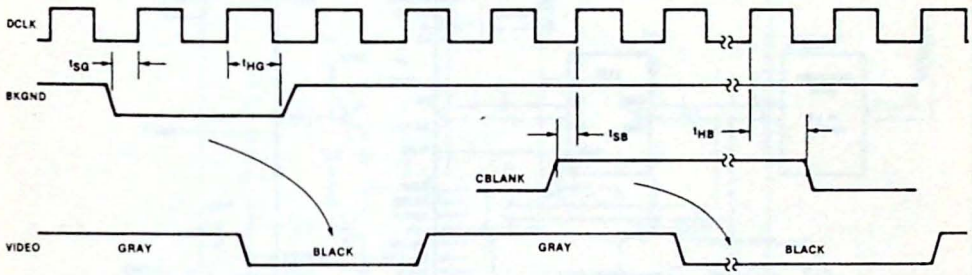

Figure 8. BKGND and RBLANK Timing During Inactive Scan Time (Blank = 1)

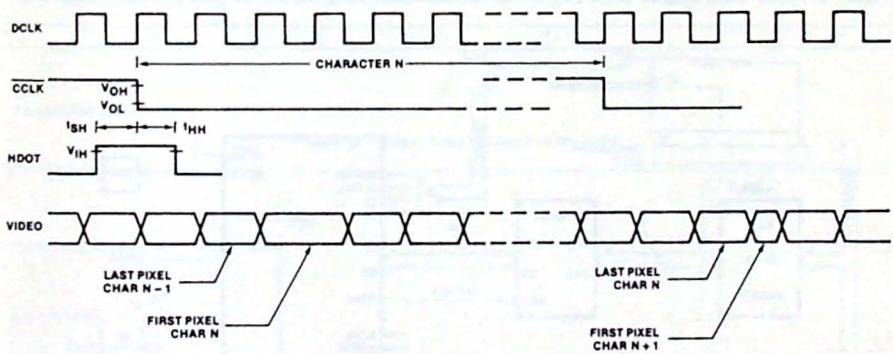

NOTE
1. Half dot shift feature 18MHz maximum.

Figure 9. Half Dot Shift Timing

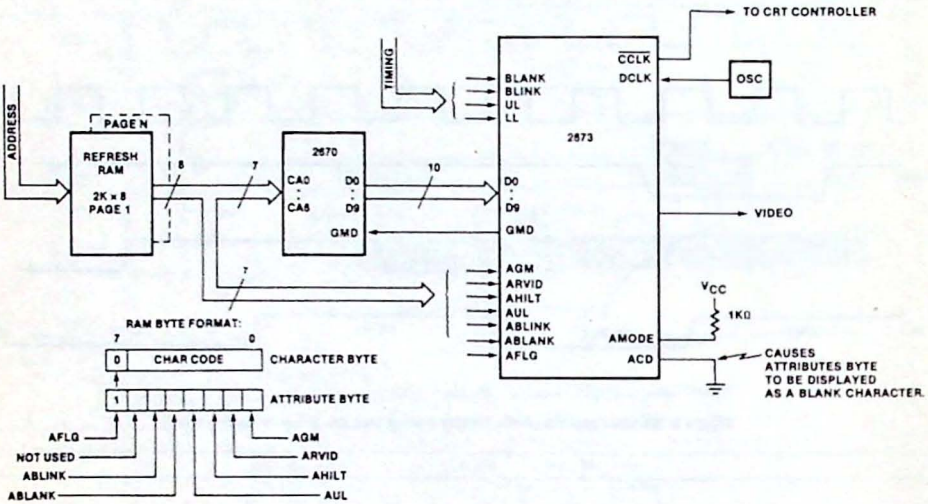

Figure 10. System Block Diagram of the 2673 in Field Attribute Mode Using the Narrow RAM (8 Wide) Configuration

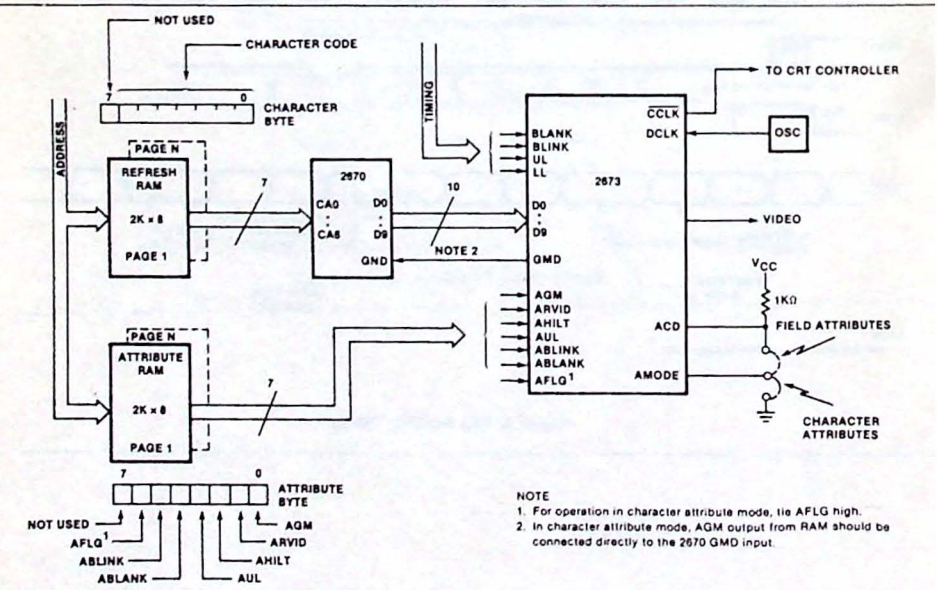

NOTE
1. For operation in character attribute mode, tie AFLG high.
2. In character attribute mode, AGM output from RAM should be connected directly to the 2670 GMD input.

Figure 11. System Block Diagram of the 2673 in Field or Character Attribute Mode Using the Wide RAM Configuration

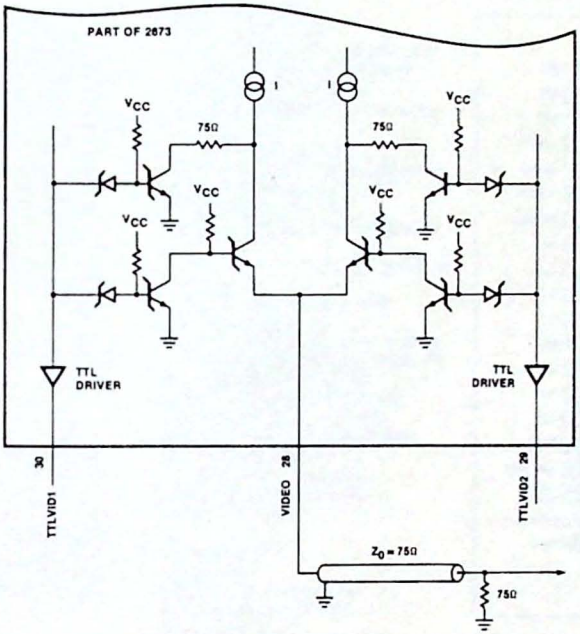

Figure 12. Video Output Stages of the 2673

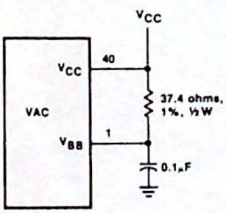

Figure 13. Test Diagram

Preliminary

DESCRIPTION

The Signetics SCN2674 Advanced Video Display Controller (AVDC) is a programmable device designed for use in CRT terminals and display systems that employ raster scan techniques. The AVDC generates the vertical and horizontal timing signals necessary for the display of interlaced or non-interlaced data on a CRT monitor. It provides consecutive addressing to a user specified display buffer memory domain and controls the CPU-display buffer interface for various buffer configuration modes. A variety of operating modes, display formats, and timing profiles can be implemented by programming the control registers in the AVDC.

A minimum CRT terminal system configuration consists of an AVDC, an SCN2671 Keyboard and Communication Controller (PKKCC), an SCN2670 Display Character and Graphics Generator (DCGG), an SCCB2675 Color/Monochrome Attributes Controller (CMAC), a single chip microcomputer such as the 8048, a display buffer RAM, and a small amount of TTL for miscellaneous address decoding, interface, and control. Typically, the package count for a minimum system is between 15 and 20 devices; system complexity can be enhanced by upgrading the microprocessor and expanding via the system address and data busses.

FEATURES

- 4MHz character rate
- 1 to 256 characters per row
- 1 to 16 raster lines per character row
- 1 to 128 character rows per frame
- Bit mapped graphics mode
- Programmable horizontal and vertical sync generators
  — RS170 compatible sync
- Interlaced or non-interlaced operation
- Up to 64K RAM addressing for multiple page operation
- Readable, writable and incrementable cursor
  — Programmable cursor size and blink
- AC line lock
- Automatic wraparound of RAM
- Automatic split screen
- Automatic bidirectional soft scrolling
  — Programmable scan line increment
- Row table addressing mode
- Double height tops and bottoms
- Double width control output
- Selectable buffer interface modes
- Dynamic RAM refresh
- Completely TTL compatible
- Single +5 volt power supply
- Power on reset circuit

APPLICATIONS

- CRT terminals
- Word processing systems
- Small business computers
- Home computers

PIN CONFIGURATION

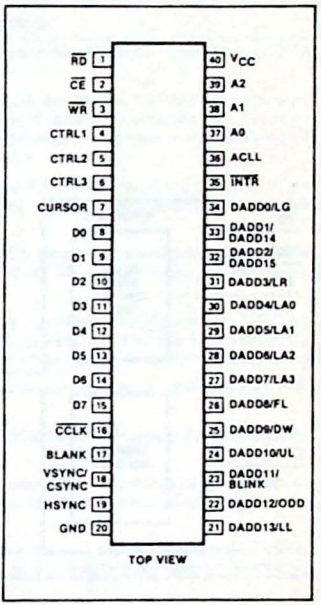

ORDERING CODE

PACKAGES	$V_{CC} = 5V \pm 5\%$, $T_A = 0°$ to 70°C	
	4MHz	2.7MHz
Ceramic DIP	SCN2674BC4I40	SCN2674BC3I40
Plastic DIP	SCN2674BC4N40	SCN2674BC3N40

Preliminary

BLOCK DIAGRAM

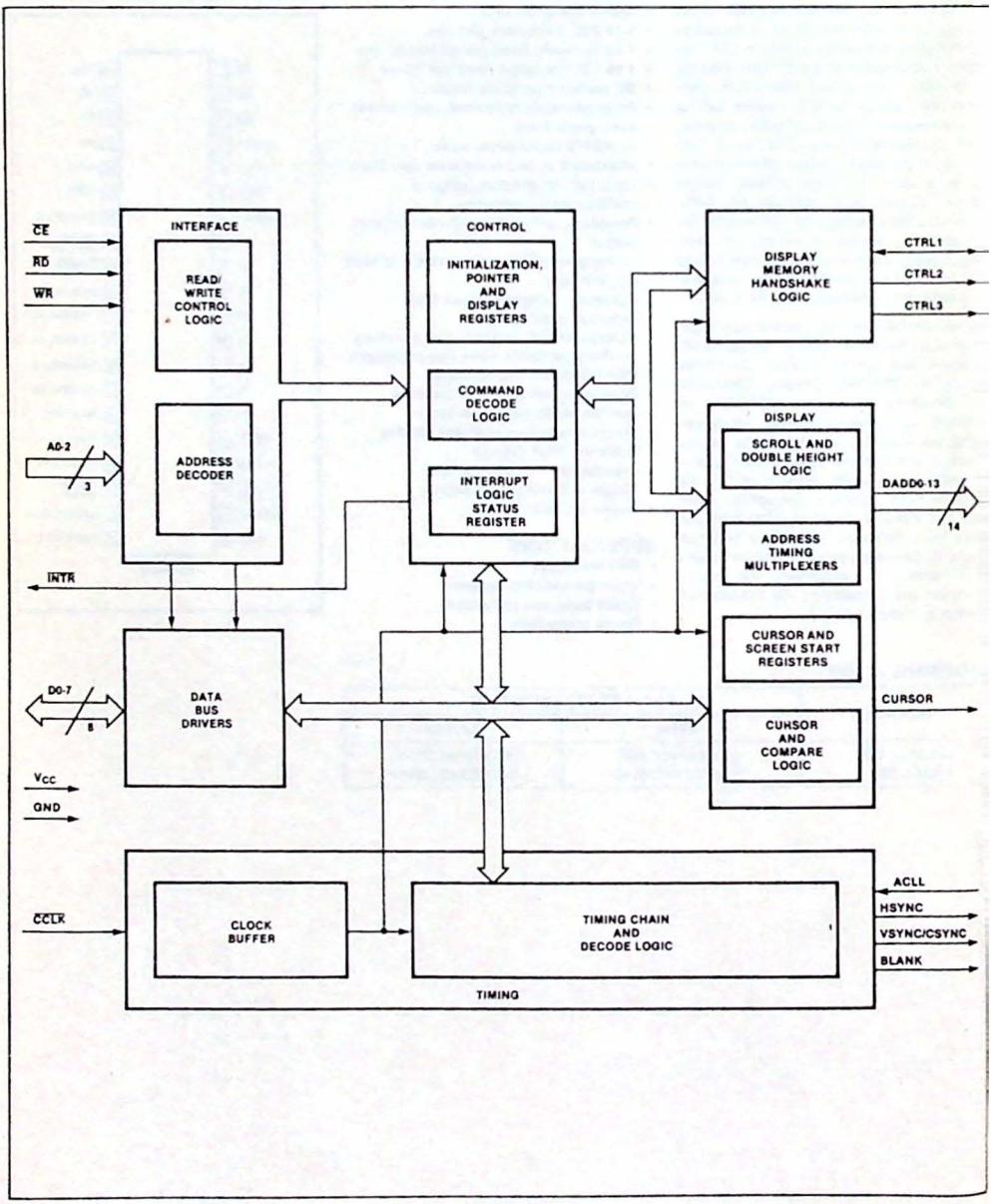

VALVO

Preeliminary

PIN DESIGNATION

MNEMONIC	PIN NO.	TYPE	NAME AND FUNCTION
A0/0-A2	37-39	I	**Address Lines:** Used to select AVDC internal registers for read/write operations and for commands.
D0/0-D7	8-15	I/O	**8-Bit Bidirectional Three-State Data Bus:** Bit 0 is the LSB and bit 7 is the MSB. All data, command, and status transfers between the CPU and the AVDC take place over this bus. The direction of the transfer is controlled by the $\overline{RD}$ and $\overline{WR}$ inputs when the $\overline{CE}$ input is low. When the $\overline{CE}$ input is high, the data bus is in the three-state condition.
$\overline{RD}$	1	I	**Read Strobe:** Active low input. A low on this pin while $\overline{CE}$ is low causes the contents of the register selected by A0-A2 to be placed on the data bus. The read cycle begins on the leading (falling) edge of $\overline{RD}$.
$\overline{WR}$	3	I	**Write Strobe:** Active low input. A low on this pin while $\overline{CE}$ is also low causes the contents of the data bus to be transferred to the register selected by A0-A2. The transfer occurs on the trailing (rising) edge of $\overline{WR}$.
$\overline{CE}$	2	I	**Chip Enable:** Active low input. When low, data transfers between the CPU and the AVDC are enabled on D0-D7 as controlled by the $\overline{WR}$, $\overline{RD}$, and A0-A2 inputs. When $\overline{CE}$ is high, effectively, the AVDC is isolated from the data bus and D0-D7 are placed in the three-state condition.
$\overline{CCCLK}$	16	I	**Character Clock:** Timing signal derived from the video dot clock which is used to synchronize the AVDC's timing functions.
HSSYNC	19	O	**Horizontal Sync:** Active high output which provides video horizontal sync pulses. The timing parameters are programmable.
VSSYNC/CSYNC	18	O	**Vertical Sync/Composite Sync:** A control bit selects either vertical or composite sync pulses on this active high output. When CSYNC is selected, equalization pulses are included. The timing parameters are programmable.
BLANK	17	O	**Blank:** This active high output defines the horizontal and vertical borders of the display. Display control signals which are output on DADD0 and DADD3 thru DADD13 are valid on the trailing edge of BLANK.
CURSOR	7	O	**Cursor Gate:** This output becomes active for a specified number of scan lines when the address contained in the cursor register matches the address output on DADD0 through DADD13 for displayable character addresses. The first and last lines of the cursor and a blink option are programmable. When the row table addressing mode is enabled, this output is active for a portion of the blanking interval prior to the first scan line of a character row, while the AVDC is fetching the starting address for that row.
$\overline{INTR}$	35	O	**Interrupt Request:** Open drain output which supplies an active low interrupt request from any of five maskable sources. This pin is inactive after a power on reset or a master reset command.
ACLL	36	I	**AC Line Lock:** If this input is low after the programmed vertical front porch interval, the vertical front porch will be lengthened by increments of horizontal scan line times until this input goes high.
CTRL1	4	I/O	**Handshake Control 1:** In independent mode, provides an active low write data buffer ($\overline{WDB}$) output which strobes data from the interface latch into the display memory. In transparent and shared modes, this is an active low processor bus request ($\overline{PBREQ}$) input which indicates that the CPU desires to access the display memory.
CTRL2	5	O	**Handshake Control 2:** In independent mode, provides an active low read data buffer ($\overline{RDB}$) output which strobes data from the display memory into the interface latch. In transparent and shared modes, this is an active low bus external enable ($\overline{BEXT}$) output which indicates that the AVDC has relinquished control of the display memory (DADD0-DADD13 are in the three-state condition) in response to a CPU bus request. $\overline{BEXT}$ also goes low in response to a 'display off and float DADD' command. In row buffer mode, it is an active low bus request ($\overline{BREQ}$) output which halts the CPU during a line DMA.
CTRL3	6	O	**Handshake Control 3:** In independent mode, provides the active low buffer chip enable ($\overline{BCE}$) signal to the display memory. In transparent and shared modes, provides an active low bus acknowledge ($\overline{BACK}$) output which serves as a ready signal to the CPU in response to a processor bus request. In row buffer mode, this is an active high memory bus control (MBC) output which configures the system for the DMA transfer of one row of character codes from system memory to the row display buffer.

Preliminary

MNEMONIC	PIN NO.	TYPE	NAME AND FUNCTION
DADD0–DADD13	34–21	O	**Display Address:** Used by the AVDC to address up to 16K of display memory directly, or to 64K of memory by de-multiplexing DADD14 and DADD15. These outputs are floated at various times depending on the buffer mode. Various control signals are multiplexed on DADD0 through DADD13 and are valid at the trailing edge of BLANK. These control signals are: DADD0/LG **Line Graphics:** Output which denotes bit mapped graphics mode. DADD1/DADD14 **Display Address 14:** Multiplexed address bit used to extend addressing to 64K. DADD2/DADD15 **Display Address 15:** Multiplexed address bit used to extend addressing to 64K. DADD3/LR **Last Row:** Output which indicates the last active character row of each field. DADD4–DADD7/LA0–LA3 **Line Address:** Provides the number of the current scan line count for each character row. DADD8/FL **First Line:** Asserted during the blanking interval just prior to the first scan line of each character row. DADD9/DW **Double Width:** Output which denotes a double width character row. DADD10/UL **Underline:** Asserted during the blanking interval just prior to the scan line which matches the programmed underline position (line 0 thru 15). DADD11/BLINK **Blink Frequency:** Provides an output divided down from the vertical sync rate. DADD12/ODD **Odd Field:** Active high signal which is asserted before each scan line of the odd field when interlace is specified. Replaces DADD4/LA0 as the least significant line address for interlaced sync and video applications. DADD13/LL **Last Line:** Asserted during the blanking interval just prior to the last scan line of each character row.
V_{CC}	40	I	**Power Supply:** +5 volts power input.
GND	20	I	**Ground:** Signal and power ground input.

FUNCTIONAL DESCRIPTION

As shown in the block diagram, the AVDC contains the following major blocks:

- Data bus buffer
- Interface Logic
- Operation Control
- Timing
- Display Control
- Buffer Control

Data Bus Buffer

The data bus buffer provides the interface between the external and internal data busses. It is controlled by the operation control block to allow read and write operations to take place between the controlling CPU and the AVDC.

Interface Logic

The interface logic contains address decoding and read and write circuits to permit communications with the microprocessor via the data bus buffer. The functions performed by the CPU read and write operations are shown in table 1.

Operation Control

The operation control section decodes configuration and operation commands from the CPU and generates appropriate

Table 1 AVDC ADDRESSING

A2	A1	A0	READ ($\overline{RD}$ = 0)	WRITE ($\overline{WR}$ = 0)
0	0	0	Interrupt register	Initialization registers[1]
0	0	1	Status register	Command register
0	1	0	Screen start 1 lower register	Screen start 1 lower register
0	1	1	Screen start 1 upper register	Screen start 1 upper register
1	0	0	Cursor address lower register	Cursor address lower register
1	0	1	Cursor address upper register	Cursor address upper register
1	1	0	Screen start 2 lower register	Screen start 2 lower register
1	1	1	Screen start 2 upper register	Screen start 2 upper register

[1] There are 15 initialization registers which are accessed sequentially via a single address. The AVDC maintains an internal pointer to these registers which is incremented after each write at this address until the last register (IR14) is accessed. The pointer then continues to point to IR14 for additional accesses. Upon a power-on or a master reset command, the internal pointer is reset to point to the first register (IR0) of the initialization register group. The internal pointer can also be preset to any register of the group via the 'load IR address pointer' command.

Preliminary

nnals to other internal sections to con- the overall device operation. It con- ns the timing and display registers ich configure the display format and nerating mode, the interrupt logic, and status register which provides opera- nal feedback to the CPU.

ming

e timing section contains the counters d decoding logic necessary to generate monitor timing outputs and to control display format. These timing param- ers are selected by programming of the tialization registers.

splay Control

e display control section generates ar addressing for up to 16K bytes of play memory. Internal comparators lit the portion of the memory which is played to programmed values. Addi- nal functions performed in this section lude cursor positioning and address mparisons required for generation of ing signals, double height tops and ttoms, smooth scrolling, and the split een interrupts.

uffer Control

e buffer control section generates three nals which control the transfer of data tween the CPU and the display buffer emory. Four system configurations re- iring four different 'handshaking' hemes are supported. These are scribed below.

YSTEM CONFIGURATIONS

gure 1 illustrates the block diagram of a pical display terminal using the gnetics SCN2670, SCN2671, SCN2674, d SCB2675 CRT terminal devices. In s system, the CPU examines inputs m the data communications line and e keyboard and places the data to be splayed in the display buffer memory. is buffer is typically a RAM which holds e data for a single or multiple screen- ad (page) or for a single character row.

e AVDC supports four common system nfigurations of display buffer memory, signated the independent, transparent, ared, and row buffer modes. The first ree modes utilize a single or multiple ge RAM and differ primarily in the eans used to transfer display data be- een the RAM and the CPU. The row buf- r mode makes use of a single row buffer hich can be a shift register or a small AM) that is updated in real time to con- in the appropriate display data.

The user programs bits 0 and 1 of IR0 to select the mode best suited for the system environment. The CNTRL1-3 outputs perform different functions for each mode and are named accordingly in the description of each mode.

Independent Mode

The CPU to RAM interface configuration for this mode is illustrated in figure 2. Transfer of data between the CPU and display memory is accomplished via a bidirectional latched port and is controlled by read data buffer ($\overline{RDB}$), write data buffer ($\overline{WDB}$), and buffer chip enable ($\overline{BCE}$). This mode provides a non-contention type of operation that does not require address multiplexers. The CPU does not address the memory directly—the read or write operation is performed at the address contained in the cursor address register or the pointer address register as specified by the CPU. The AVDC enacts the data transfers during blanking intervals in order to prevent visual disturbances of the displayed data.

The CPU manages the data transfers by supplying commands to the AVDC. The commands used are:

1. Read/write at pointer address.
2. Read/write at cursor address (with optional increment of address).
3. Write from cursor address to pointer address.

The operational sequence for a write operation is:

1. CPU checks RDFLG status bit to assure that any delayed commands have been completed.
2. CPU loads data to be written to display memory into the interface latch.
3. CPU writes address into cursor or pointer registers.
4. CPU issues 'write at cursor with/without increment' or 'write at pointer' command.
5. AVDC generates control signals and outputs specified address to perform requested operation. Data is copied from the interface latch into the memory.
6. AVDC sets RDFLG status to indicate that the write is completed.

Similarly, a read operation proceeds as follows:

1. Steps 1 and 3 as above.
2. CPU issues 'read at cursor with/without increment' or 'read at pointer' command.
3. AVDC generates control signals and outputs specified address to perform requested operation. Data is copied from memory to the interface latch and AVDC sets RDFLG status to indicate that the read is completed.
4. CPU checks RDFLG status to see if operation is completed.
5. CPU reads data from interface latch.

Loading the same data into a block of display memory is accomplished via the 'write from cursor to pointer' command:

1. CPU checks RDFLG status bit to assure that any delayed commands have been completed.
2. CPU loads data to be written to display memory into the interface latch.
3. CPU writes beginning address of memory block into cursor address register and ending address of block into pointer address register.
4. CPU issues 'write from cursor to pointer' command.
5. AVDC generates control signals and outputs block addresses to copy data from the interface latch into the specified block of memory.
6. AVDC sets RDFLG status to indicate that the block write is completed.

Similar sequences can be implemented on an interrupt driven basis using the READY interrupt output to advise the CPU that a previously asserted delayed command has been completed.

Two timing sequences are possible for the 'read/write at cursor/pointer' commands. If the command is given during the active display window (defined as first scan line of the first character row to the last scan line of the last character row), the operation takes place during the next horizontal blanking interval, as illustrated in figure 3. If the command is given during the vertical blanking interval, or while the display has been commanded blanked, the operation takes place immediately. In the latter case, the execution time for the command is approximately five character clocks (see figure 4).

Timing for the 'write from cursor to pointer' operation is shown in figure 5. The memory is filled at a rate of one location per two character times. The command will execute only during blanking intervals and may require many horizontal or vertical blanking intervals to complete. Additional delayed commands can be asserted immediately after this command has completed.

Immediate commands can be asserted at any time regardless of the state of the ready status/interrupt.

Preliminary

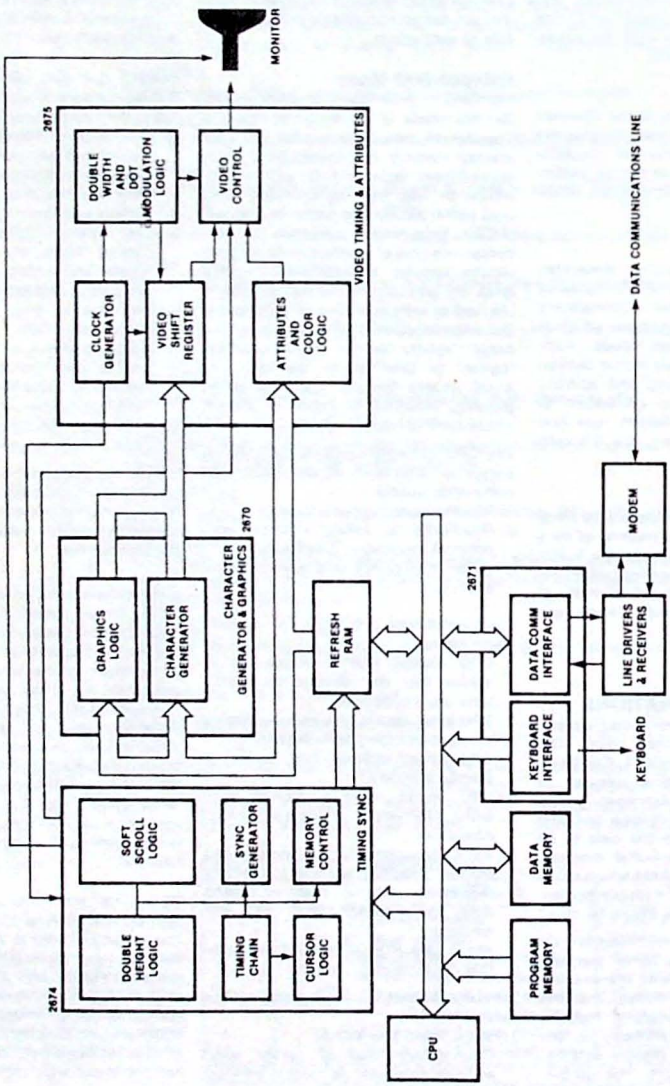

Figure 1. CRT Terminal Block Diagram

Preliminary

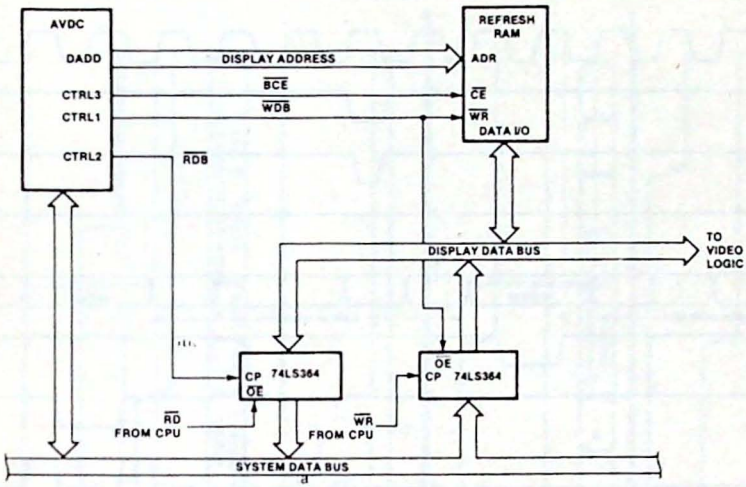

Figure 2. Indendent Buffer Mode Configuration

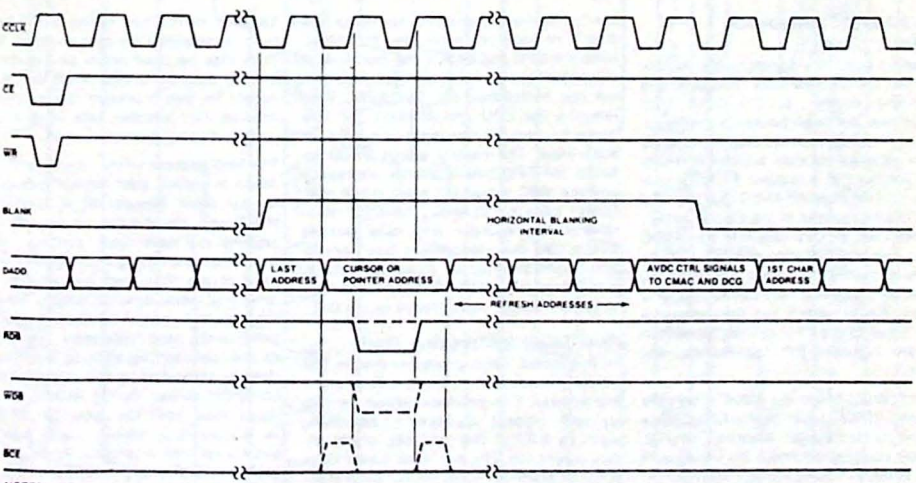

NOTES
1. Write waveforms shown in dotted lines.
2. If command execution occurs just prior to the first scan line of a character row and row table addressing mode is enabled, execution of the command is delayed by two character clocks from the timing illustrated.

Figure 3. Read/Write at Cursor/Pointer Command Timing (Command Received During Active Display Window)

Preliminary

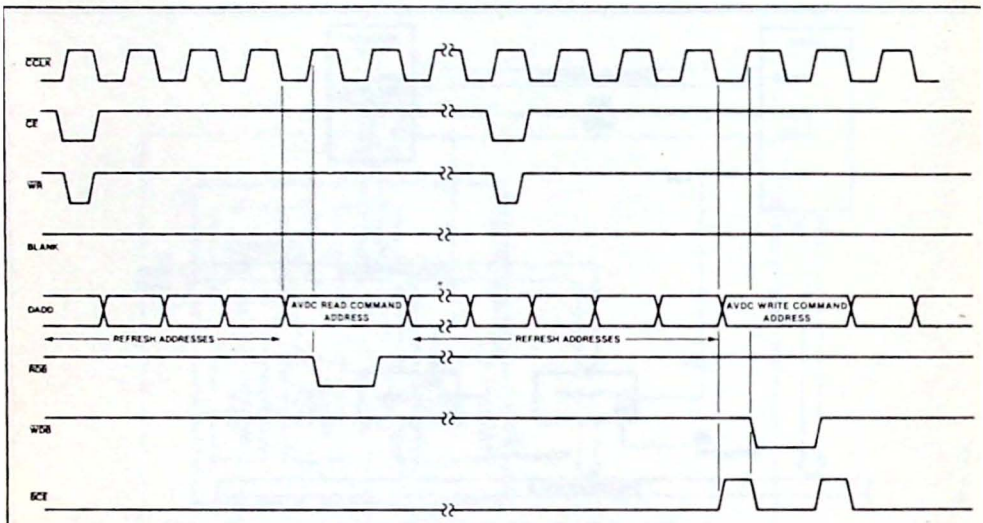

Figure 4. Read/Write at Cursor/Pointer Command Timing (Command Received While Display is Blanked)

Shared and Transparent Buffer Modes

In these modes, the display buffer RAM is a part of the CPU memory domain and is addressed directly by the CPU. Both modes use the same hardware configuration with the CPU accessing the display buffer via three-state drivers (see figure 6). The processor bus request ($\overline{PBREQ}$) control signal informs the AVDC that the CPU is requesting access to the display buffer. In response to this request, the AVDC raises bus acknowledge ($\overline{BACK}$) until its bus external ($\overline{BEXT}$) output has freed the display address and data busses for CPU access. $\overline{BACK}$, which can be used as a 'hold' input to the CPU, is then lowered to indicate that the CPU can access the buffer.

In transparent mode, the AVDC delays the granting of the buffer to the CPU until a vertical or horizontal blanking interval, thereby causing minimum disturbance of the display. In shared mode, the AVDC will blank the display and grant immediate access to the CPU. Timing for these modes is illustrated in figures 7, 8, and 9.

Row Buffer Mode

Figures 10 and 11 show the timing and a typical hardware implementation for the row buffer mode. During the first scan line (line 0) of each character row, the AVDC halts the CPU and DMA's the next row of character data from the system memory to the row buffer memory. The AVDC then releases the CPU and displays the row buffer data for the programmed number of scan lines. The control signal $\overline{BREQ}$ informs the CPU that character addresses and the MBC signal will start at the next falling edge of BLANK. The CPU must release the address and data busses before this time to prevent bus contention. After the row of character data is transferred to the CPU, $\overline{BREQ}$ returns high to grant memory control back to the CPU.

Row Table Addressing Mode

In this mode, each character row in the screen image memory has a unique starting address. This provides greater flexibility with respect to screen operations, such as editing, than the sequential addressing mode. The row table, figure 12, is a list of starting addresses for each character row and may reside anywhere in the AVDC's addressable memory space. Each entry in the table consists of two bytes: the first byte contains the 8 LSBs of the row starting address and the second byte contains, in its 6 least significant bits, the 6 MSBs of the row starting address. The function of the two MSBs of the seco byte is selected by programming IR0[They may be used either as row attribu bits to control double width and doub height for that character row, or as an a ditional two address bits to extend t usable display memory to 64K.

The first address of the row table is des nated in screen start register two (SSR The first row table addressing is enabled IR2[7], and the display is on, the AD fetches the next row's starting addre from the table during the blanking inter prior to the first scan line of each cha acter row, while simultaneously increme ting the contents of SSR2 by two so as point to the next table entry. The fetchi of the row starting address from the ro table is indicated by the assertion of t CURSOR output during BLANK. The a dress read from the table by the AVD is loaded into screen start register (SSR1) for use internally. Since the co tents of SSR2 changes as the table entri are fetched, it must be re-initialized point to the first table entry during ea vertical retrace interval.

Row table addressing is intended prima ly for use in conjunction with the row b fer mode of operation and requires additional circuitry in that case. It m

Preliminary

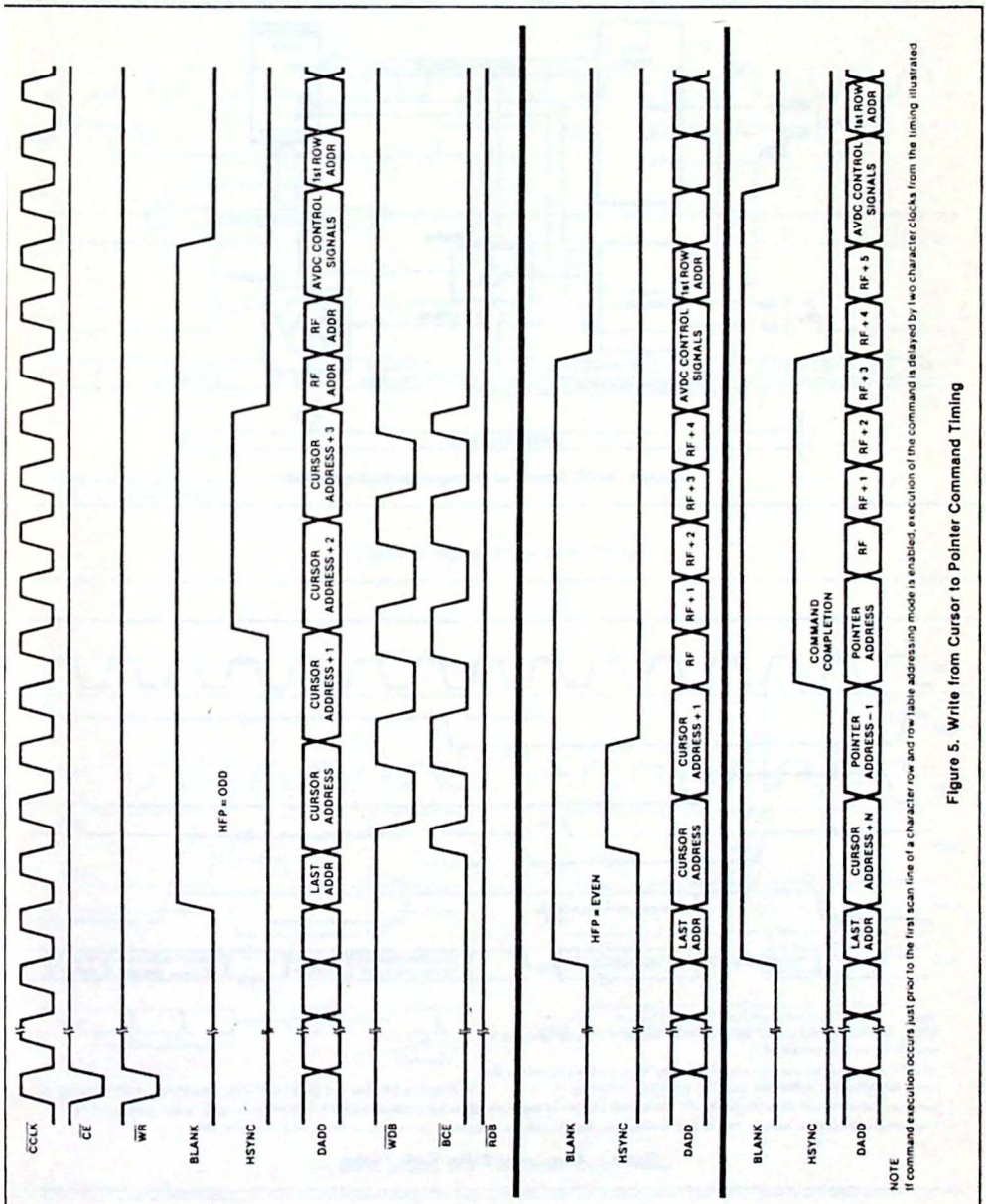

NOTE
If command execution occurs just prior to the first scan line of a character row and row table addressing mode is enabled, execution of the command is delayed by two character clocks from the timing illustrated

Figure 5. Write from Cursor to Pointer Command Timing

Preliminary

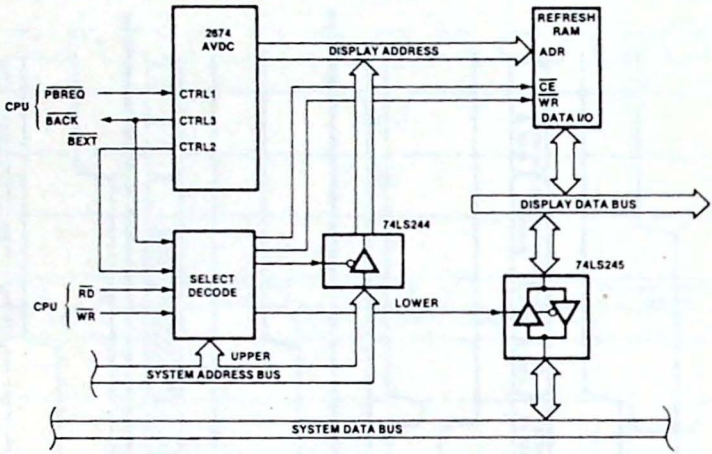

Figure 6. AVDC Shared or Transparent Buffer Modes

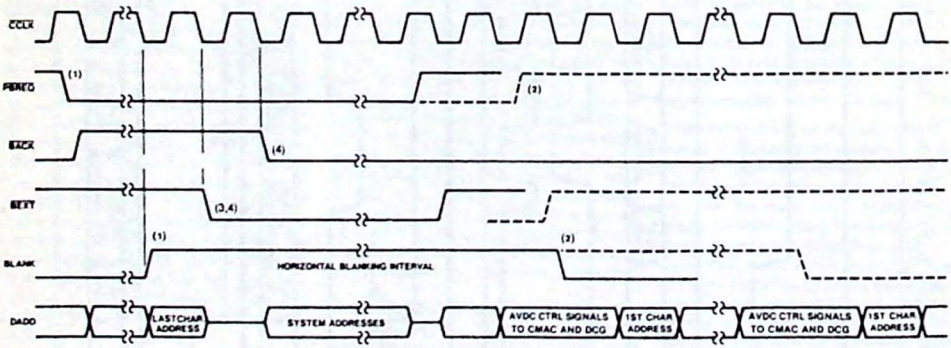

NOTES

1. PBREQ must be asserted prior to the rising edge of BLANK in order for sequence to begin during that blanking period.
2. If PBREQ is negated after the next to last CCLK of the horizontal blanking interval, the next scan line will also be blanked.
3. Accesses during vertical blank or "display off" are granted only at the beginning of the horizontal front porch.
4. If row table addressing is enabled, CPU access is delayed by two character clocks prior to the first scan line of each character row.

Figure 7. Transparent Buffer Mode Timing

PPreliminary

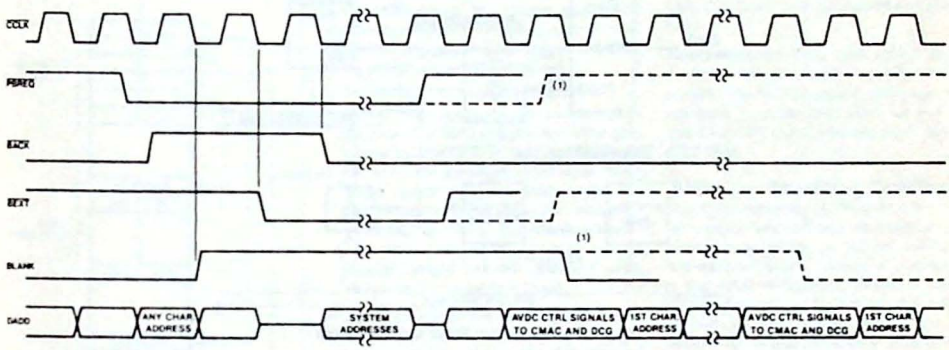

NOTE
1. If PBREQ is negated after the next to last CCLK of the horizontal blanking interval, the next scan line will also be blanked.

Figure 8. Shared Buffer Mode Timing

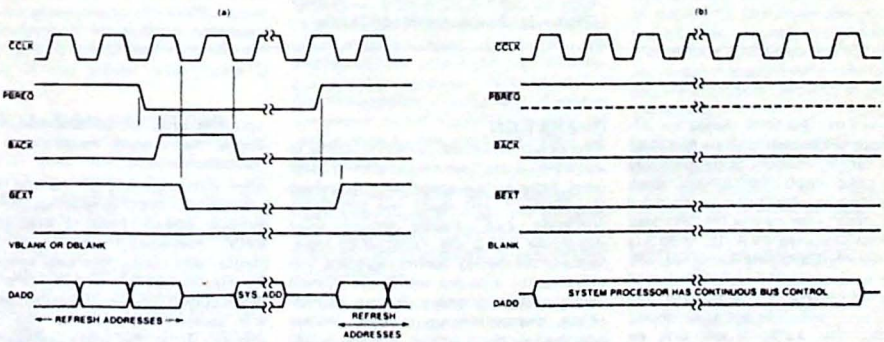

a) During Vertical Blank or after 'display off' command in shared mode only. See Figure 7 for transparent timing.

b) After 'display off and 3–state' command

Figure 9. Shared and Transparent Mode Timing

Preliminary

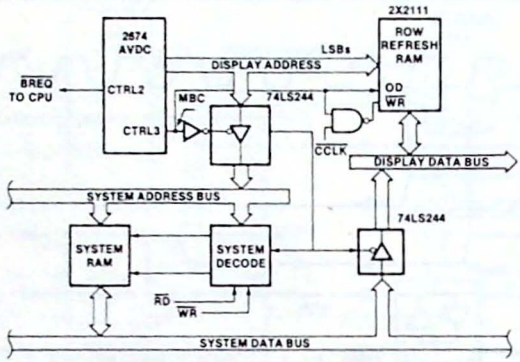

Figure 10. Row Buffer Mode Configuration

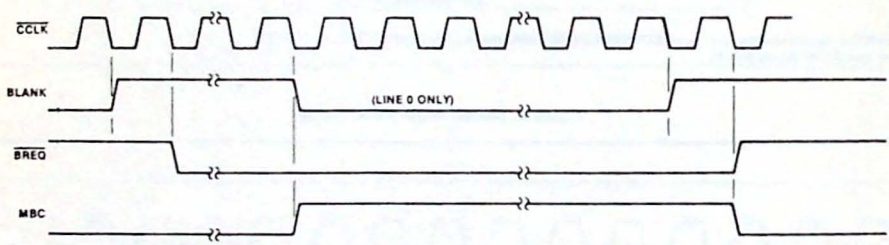

NOTE
If row table addressing is enabled, BREQ will be asserted at the middle of the last scan line of the prior row, and MBC will be asserted at the beginning of BLANK.

Figure 11. Row Buffer Mode Timing

also be used with the other modes, but circuitry must be added to route the data from the display memory to the data bus inputs of the AVDC. Additionally, when not operating in row buffer mode, care must be taken to assure that the CPU does not attempt to access the AVDC while it is reading the row table. One way of preventing this is to latch the last line output which is multiplexed on DADD13 and to test this latch prior to reading or writing the AVDC. The AVDC should only be accessed if the latch is low, indicating that the last line of the row is not active.

Figure 13 illustrates a typical hardware implementation for use in conjunction with independent and transparent modes, and figure 14 shows the timing for row table operation.

OPERATION

After power is applied, the AVDC will be in an inactive state. Two consecutive 'master reset' commands are necessary to release this circuitry and ready the AVDC for operation. Two register groups exist within the AVDC: the initialization registers and the display control registers. The initialization registers select the system configuration, monitor timing, cursor shape, display memory domain, pointer address, scrolling region, double height and width condition, and screen format. These are loaded first and normally require no modification except for certain special visual effects. The display control registers specify the memory address of the base character (upper left corner of screen), the cursor position, and the split screen addresses associated with the scrolling area or an alternate memory. These may require modification during operation.

After initial loading of the two register groups, the AVDC is ready to control the monitor screen. Prior to executing the AVDC commands which turn on the display and cursor, the user should load the display memory with the first data to be displayed. During operation, the AVDC will sequentially address the display memory within the limits programmed into its registers. The memory outputs character codes to the system character and graphics generation logic, where they are converted to the serial video stream necessary to display the data on the CRT. The user effects changes to the display by modifying the contents of the display memory, the AVDC display control and

Preliminary

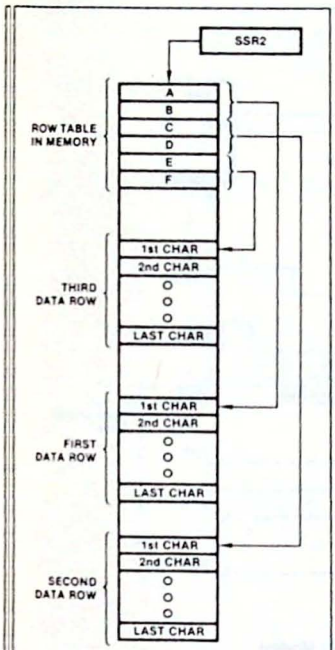

Figure 12. Row Table Address Format

command registers, and the initialization registers, if required. Interrupts and status conditions generated by the AVDC supply the 'handshaking' information necessary for the CPU to effect real time display changes in the proper time frame if required.

INITIALIZATION REGISTERS

There are 15 initialization registers (IR0–IR14) which are accessed sequentially via a single address. The AVDC maintains an internal pointer to these registers which is incremented after each write at this address until the last register (IR14) is accessed. The pointer then continues to point to IR14 for further accesses. Upon a power-on or a master reset command, the internal pointer is reset to point to the first register (IR0) of the initialization register group. The internal pointer can also be preset to any register of the group via the 'load IR address pointer' command. These registers are write only and are used to specify parameters such as the system configuration, display format, cursor shape, and monitor timing. Register formats are shown in figure 15.

IR0[7] — Double Height/ Width Enable

When this bit is set, the value in IR14[7:6] is used to control the double height and width conditions of each character row. Assertion of this bit also allows IR14[7:6] to be programmed in two ways:

1. By the CPU writing to IR14 directly.
2. When the contents of screen start register 1 (SSR1) upper are changed, either by the CPU writing to this register or by the automatic loading of SSR1 when operating in row table mode, the two MSBs of SSR1 upper are copied into IR14[7:6]. Thus, the MSBs of each row table entry can be used to control double height and double width attributes on a row by row basis.

IR14[5:4] are not active when this bit is set. When this bit is reset, the double height and width attributes operate as described in IR[14].

IR0[6:3] — Scan Lines per Character Row

Both interlaced and non-interlaced scanning are supported by the AVDC. For interlaced mode, two different formats can be implemented, depending on the interconnection between the AVDC and the character generator (see IR1[7]). This field defines the number of scan lines used to compose a character row for each technique. As scanning occurs, the scan line count is output on the LA0–LA3 and ODD pins.

IR0[2] — VSYNC/CSYNC Enable

This bit selects either vertical sync pulses or composite sync pulses on the VSYNC/CSYNC output (pin 18). The composite sync waveform conforms to EIA RS170 standards, with the vertical interval composed of six equalizing pulses, six vertical sync pulses, and six more equalizing pulses.

IR0[1:0] — Buffer Mode Select

Four buffer memory modes may be selectively enabled to accommodate the desired system configuration. See System Configurations.

IR1[7] — Interlace Enable

Specifies interlaced or noninterlaced timing operation. Two modes of interlaced operation are available, depending on whether L0–L3 or ODD, L0–L2 are used as the line address for the character generator. The resulting displays are shown in figure 16.

For 'interlaced sync' operation, the same information is displayed in both odd and even fields, resulting in enhanced readability. The AVDC outputs successive line numbers in ascending order on the LA0–LA3 lines, one per scan line for each field.

The 'interlaced sync and video' format doubles the character density on the screen. The AVDC outputs successive line numbers in ascending order on the odd and LA0–LA2 lines, one per scan line for each field.

IR1[6:0] — Equalizing Constant

This field indirectly defines the horizontal front porch and is used internally to generate the equalizing pulses for the RS170 compatible CSYNC. The value for this field is the total number of character clocks ($\overline{CCLK}$s) during a horizontal line period divided by two, minus two times the number of character clocks in the horizontal sync pulse:

$$EC = \frac{H_{ACT} + H_{FP} + H_{SYNC} + H_{BP}}{2} - 2(H_{SYNC})$$

The definition of the individual parameters is illustrated in figure 17. The minimum value of H_{FP} is two character clocks.

Note that when using the 2675 CMAC, it will delay the blank pulse three $\overline{CCLK}$s relative to the HSYNC pulse.

IR2[7] — Row Table Mode Enable

Assertion/negation of this bit causes the AVDC to begin/terminate operating in row table mode starting at the next character row. See Row Table Addressing Mode section. By using the split interrupt capability of the AVDC, this mode can be enabled and disabled on a particular character row. This allows a combination of row table and sequential addressing to be utilized to provide maximum flexibility in generating the display.

IR2[6:3] — Horizontal Sync Pulse Width

This field specifies the width of the HSYNC pulse in $\overline{CCLK}$ periods.

IR2[2:0] — Horizontal Back Porch

This field defines the number of $\overline{CCLK}$s between the trailing edge of HSYNC and the trailing edge of BLANK.

IR3[7:5] — Vertical Front Porch

Specifies the number of scan line periods between the rising edges of BLANK and VSYNC during the vertical retrace interval. The vertical front porch will be extended in increments of scan lines if the ACLL input is low at the end of the programmed value.

Preliminary

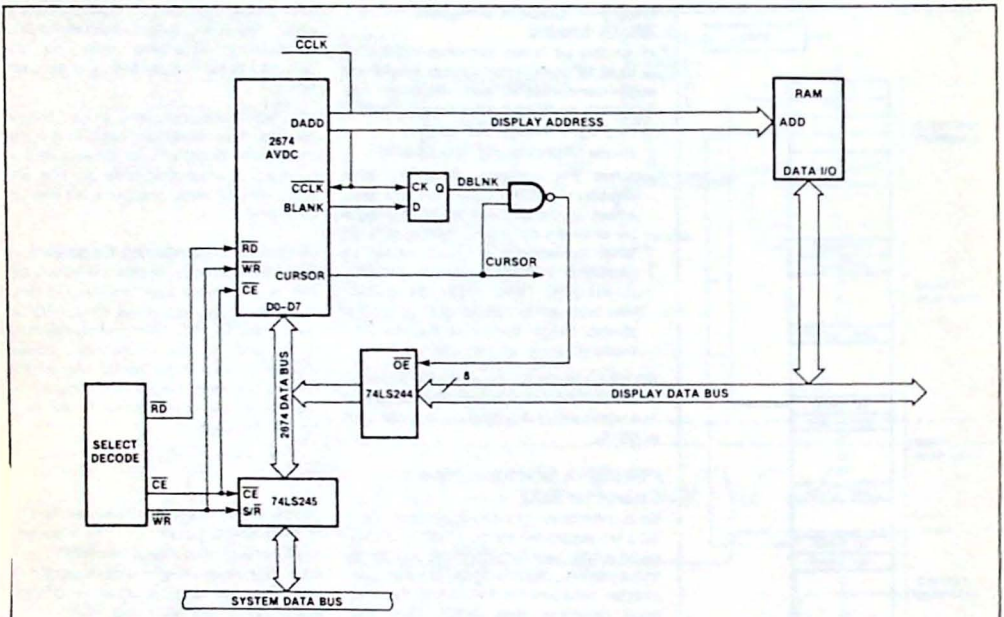

Figure 13. Row Table Mode Configuration (non-Row Buffer Modes)

IR3[4:0] — Vertical Back Porch

This field determines the number of scan line periods between the falling edges of the VSYNC and BLANK outputs.

IR4[7] — Character Blink Rate

Specifies the frequency for the character blink attribute timing. The blink rate can be specified as 1/64 or 1/128 of the vertical field rate. The timing signal has a duty cycle of 50% and is multiplexed onto the DADD11/BLINK output at the falling edge of each BLANK.

IR4[6:0] — Character Rows Per Screen

This field defines the number of character rows to be displayed. This value multiplied by the scan lines per character row, plus the vertical front porch, the vertical back porch values, and the vertical sync pulse width is the vertical scan period in scan lines.

IR5[7:0] — Active Characters Per Row

This field determines the number of characters to be displayed on each row of the CRT screen. The sum of this value, the horizontal front porch, the horizontal sync width, and the horizontal back porch is the horizontal scan period in $\overline{CCLK}$s.

IR6[7:4], IR6[3:0] — First and Last Scan Line of Cursor

These two fields specify the height and position of the cursor on the character block. The 'first' line is the topmost line when scanning from the top to the bottom of the screen.

IR7[7:6] — Vertical Sync Pulse Width

This field specifies the width of the VSYNC pulse in scan line periods.

IR7[5] — Cursor Blink Enable

This bit controls whether or not the cursor output pin will be blinked at the selected rate (IR7[4]). The blink duty cycle for the cursor is 50%.

IR7(4) — Cursor Blink Rate

The cursor blink rate can be specified at 1/32 or 1/64 of the vertical scan frequency. Blink is effective only if blink is enabled by IR7[5].

IR7[3:0] — Underline Position

This field defines which scan line of the character row will be used for the underline attribute by the 2675 CMAC. The timing signal is multiplexed onto the DADD10/UL output during the falling edge of BLANK.

IR9[3:0], IR8[7:0] — Display Buffer First Address
IR9[7:4] — Display Buffer Last Address

These two fields define the area within the buffer memory where the display data will reside. When the data at the 'display buffer last address' is displayed, the AVDC

Preliminary

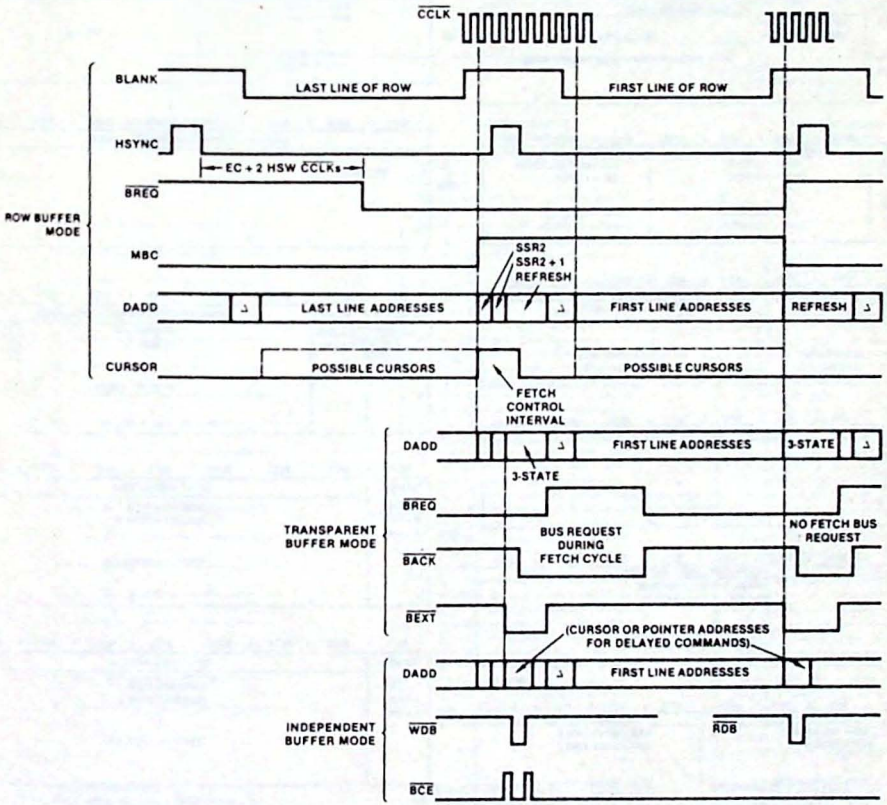

J = MULTIPLEXED CONTROL SIGNALS
EC = EQUALIZING CONSTANT
HSW = HORIZONTAL SYNC WIDTH

Figure 14. Row Table Mode Timing

Preliminary

IR0

BIT7	BIT6	BIT5	BIT4	BIT3	BIT2	BIT1	BIT0
DOUBLE HT/WD	SCAN LINES PER CHARACTER ROW				SYNC SELECT	BUFFER MODE SELECT	
	NON-INTERLACED		INTERLACED				
0 = OFF 1 = ON	0000 = 1 LINE 0001 = 2 LINES 0010 = 3 LINES • • 1110 = 15 LINES 1111 = 16 LINES		0000 = 2 LINES 0001 = 4 LINES 0010 = 6 LINES • • 1110 = 30 LINES 1111 = UNDEFINED		0 = VSYNC 1 = CSYNC	00 = INDEPENDENT 01 = TRANSPARENT 10 = SHARED 11 = ROW	

IR1

BIT7	BIT6	BIT5	BIT4	BIT3	BIT2	BIT1	BIT0
INTERLACE ENABLE	EQUALIZING CONSTANT						
0 = NON-INT 1 = INTER	0000000 = 1 CCLK 0000001 = 2 CCLK • • 1111110 = 127 CCLK 1111111 = 128 CCLK		CALCULATED FROM EC = 0.5(HACT+HBP+HSYNC+HBP) − 2(HSYNC)				

IR2

BIT7	BIT6	BIT5	BIT4	BIT3	BIT2	BIT1	BIT0
ROW TABLE	HORIZONTAL SYNC WIDTH				HORIZONTAL BACK PORCH		
0 = OFF 1 = ON	0000 = 2 CCLK 0001 = 4 CCLK • • 1110 = 30 CCLK 1111 = 32 CCLK				000 = NOT ALLOWED 001 = 3 CCLK • • 110 = 18 CCLK 111 = 21 CCLK		

IR3

BIT7	BIT6	BIT5	BIT4	BIT3	BIT2	BIT1	BIT0
VERTICAL FRONT PORCH			VERTICAL BACK PORCH				
000 = 4 SCAN LINES 001 = 8 SCAN LINES • • 110 = 28 SCAN LINES 111 = 32 SCAN LINES			00000 = 4 SCAN LINES 00001 = 6 SCAN LINES • • 11110 = 64 SCAN LINES 11111 = 66 SCAN LINES				

IR4

BIT7	BIT6	BIT5	BIT4	BIT3	BIT2	BIT1	BIT0
CHARACTER BLINK RATE	ACTIVE CHARACTER ROWS PER SCREEN						
0 = 1/64 VSYNC 1 = 1/128 VSYNC	0000000 = 1 ROW 0000001 = 2 ROWS • • 1111110 = 127 ROWS 1111111 = 128 ROWS						

IR5

BIT7	BIT6	BIT5	BIT4	BIT3	BIT2	BIT1	BIT0
ACTIVE CHARACTERS PER ROW							
00000010 = 3 CHARACTERS 00000011 = 4 CHARACTERS • • 11111110 = 255 CHARACTERS 11111111 = 256 CHARACTERS							

IR6

BIT7	BIT6	BIT5	BIT4	BIT3	BIT2	BIT1	BIT0
FIRST LINE OF CURSOR				LAST LINE OF CURSOR			
0000 = SCAN LINE 0 0001 = SCAN LINE 1 • • 1110 = SCAN LINE 14 1111 = SCAN LINE 15				0000 = SCAN LINE 0 0001 = SCAN LINE 1 • • 1110 = SCAN LINE 14 1111 = SCAN LINE 15			

IR7

BIT7	BIT6	BIT5	BIT4	BIT3	BIT2	BIT1	BIT0
VSYNC WIDTH		CURSOR BLINK	CURSOR RATE	UNDERLINE POSITION			
00 = 3 SCAN LN 01 = 1 SCAN LN 10 = 5 SCAN LN 11 = 7 SCAN LN		0 = OFF 1 = ON	0 = 1/32 1 = 1/64	0000 = SCAN LINE 0 0001 = SCAN LINE 1 • • 1110 = SCAN LINE 14 1111 = SCAN LINE 15			

IR8

BIT7	BIT6	BIT5	BIT4	BIT3	BIT2	BIT1	BIT0
DISPLAY BUFFER FIRST ADDRESS LSB'S							
H'000' = 0 H'001' = 1 • • H'FFE' = 4,094 H'FFF' = 4,095				NOTE: MSB'S ARE IN IR9[3:0]			

IR9

BIT7	BIT6	BIT5	BIT4	BIT3	BIT2	BIT1	BIT0
DISPLAY BUFFER LAST ADDRESS				DISPLAY BUFFER FIRST ADDRESS MSB'S			
0000 = 1,023 0001 = 2,047 • • 1110 = 15,359 1111 = 16,383				SEE IR8			

IR10

BIT7	BIT6	BIT5	BIT4	BIT3	BIT2	BIT1	BIT0
DISPLAY POINTER ADDRESS LOWER							
SEE IR11							

IR11

BIT7	BIT6	BIT5	BIT4	BIT3	BIT2	BIT1	BIT0
LZ DOWN	LZ UP	DISPLAY POINTER ADDRESS UPPER					
0 = OFF 1 = ON	0 = OFF 1 = ON	H'0000' = 0 H'0001' = 1 • • H'3FFF' = 16,383					

IR12

BIT7	BIT6	BIT5	BIT4	BIT3	BIT2	BIT1	BIT0
SCROLL START	SPLIT REGISTER 1						
0 = OFF 1 = ON	0000000 = ROW 1 0000001 = ROW 2 • • 1111111 = ROW 128						

IR13

BIT7	BIT6	BIT5	BIT4	BIT3	BIT2	BIT1	BIT0
SCROLL END	SPLIT REGISTER 2						
0 = OFF 1 = ON	0000000 = ROW 1 0000001 = ROW 2 • • 1111111 = ROW 128						

IR14

BIT7	BIT6	BIT5	BIT4	BIT3	BIT2	BIT1	BIT0
DOUBLE 1		DOUBLE 2		LINES TO SCROLL			
00 = NORMAL 01 = DOUBLE WIDTH 10 = DB WD & TOPS 11 = DB WD & BOTS		00 = NORMAL 01 = DOUBLE WIDTH 10 = DB WD & TOPS 11 = DB WD & BOTS		0000 = 1 0001 = 2 • • 1110 = 15 1111 = 16			

Figure 15. Initialization Register Formats

Preliminary

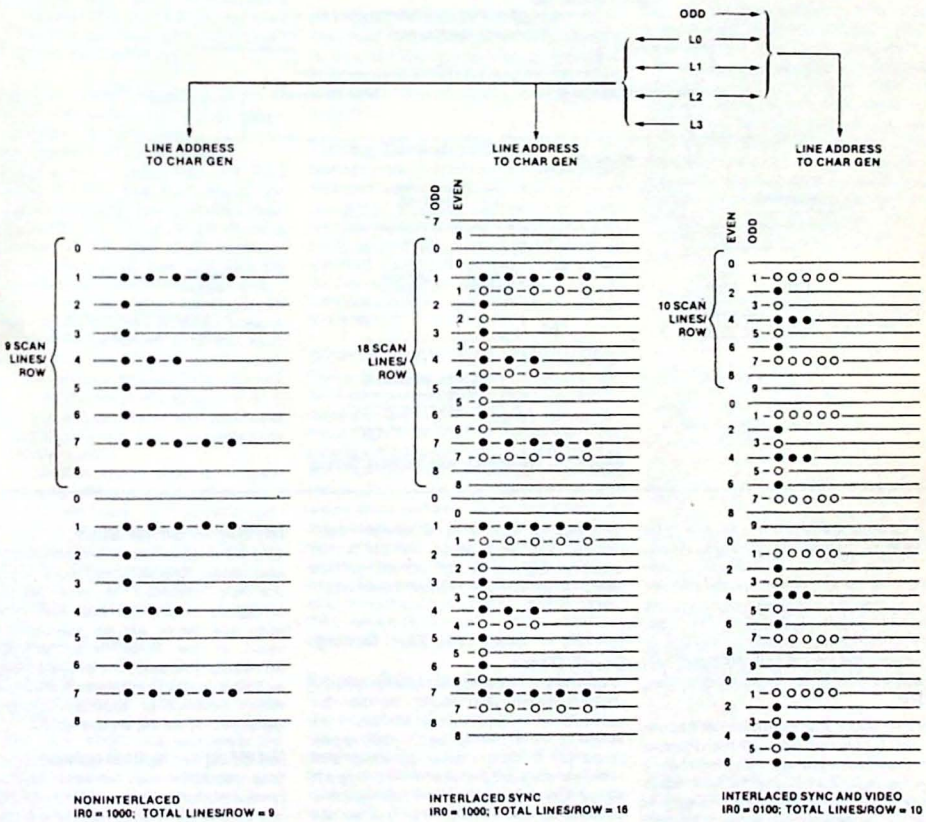

Figure 16. Interlaced Display Modes

Preliminary

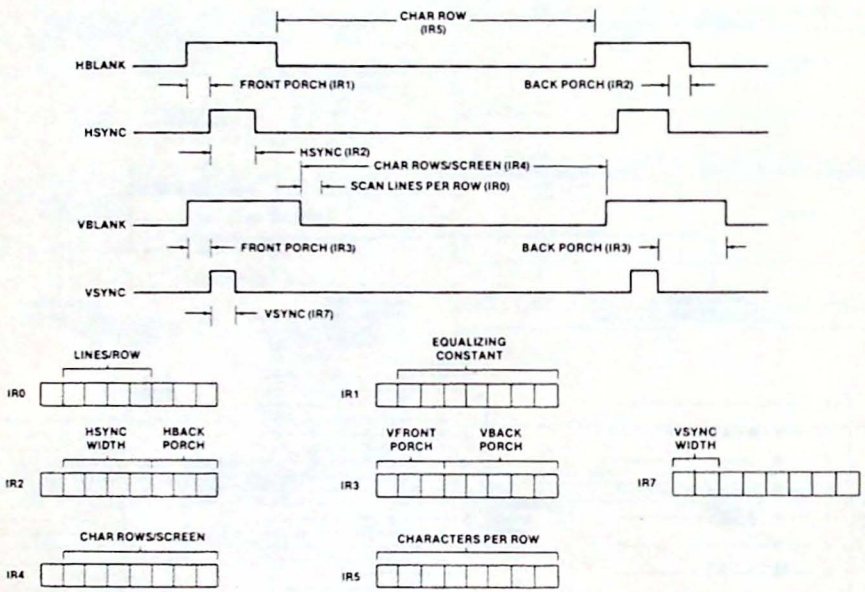

Figure 17. Horizontal and Vertical Timing

will wraparound and obtain the data to be displayed at the next screen position from the 'display buffer first address'. If 'last address' is the end of a character row and a new screen start address has been loaded into the screen start register, or if 'last address' is the last character position of the screen, the next data is obtained from the address contained in the screen start register.

Note that there is no restriction in displaying data from other areas of the addressable memory. Normally, the area between these two bounds is used for data which can be overwritten (e.g., as a result of scrolling), while data that is not to be overwritten would be contained outside these bounds and accessed by means of the automatic split screen or split screen interrupt feature of the AVDC.

IR10[7:0] — Display Pointer Address Lower

IR11[5:0] — Display Pointer Address Upper

These two fields define a buffer memory address for AVDC controlled accesses in response to 'read/write at pointer' commands. They also define the last buffer memory address to be written for the 'write from cursor to pointer' command.

IR11[7] — Scan Line Zero During Scroll Down

This field specifies normal scan line count of all scan line zero counts for the new character row that occurs at the top of the scrolling area during soft scroll down operation. If the character generator provides blanks during scan line zero, this will cause the new row to be automatically blanked on the display. This feature can be used, if necessary, to blank the new row until the CPU places 'blank data' into the display buffer.

IR11[6] — Scan Line Zero During Scroll Up

This field specifies normal scan line count of all scan line zero counts for the new character row that occurs at the bottom of the scrolling area during soft scroll up operation. See above.

IR12[7] — Scroll Start

This bit is asserted when soft scroll is t take place. The scrolling area begins a the row specified in split register 1 (IR12[6:0]). If set, the first row to scrol scan line count will be reduced by the value in the lines to scroll register (IR14[3:0]). The scan line count of this row will start at the programmed offset value. When this bit is asserted, scroll end IR13[7] must be set before split 2.

IR12[6:0] — Split Register 1

Split register 1 can be used to provide special screen effects such as soft (scan line by scan line) scrolling, double height/width rows, or to change the normal addressing sequence of the display memory. The contents of this field is compared, in real time, to the current row number. Upon a match, the AVDC sets the split screen 1 status bit, and issues an interrupt request if so programmed. The status change interrupt request is made at the beginning of scan line zero of the split screen character row. If enabled by the SPL1 bit of screen start register 2, an automatic split screen to the address specified in screen

VALVO

Preliminary

taart register 2 will be made for the desig-atted character row. During a scroll opera-omn, this field defines the first character ɔww of the scrolling area.

R113[7] — Scroll End

hiis field specifies that the row pro-raammed in split register 2 (IR13[6:0]) is to e the last scrolling row of the scrolling reea. Note that this bit must be asserted ɔr a valid row only when the scroll start it IR12[7] is also asserted.

R113[6:0] — Split Register 2

hiis field is similar to the split register 1 eldld except for the following:

Split screen 2 status bit is set.

During a scroll operation, this field defines the last character row of the scrolling area. This row will be followed by a partial row. The LTSR (IR14) value replaces the normal scan lines/row value for the partial row, thus keeping the total scan lines/screen the same.

If enabled by the SPL2 bit of screen start register 2, an automatic split to the address contained in screen start register 2 will occur in one of two ways: a) If not scrolling an automatic split will occur for the next character row. b) If scrolling, the automatic split will occur after the partial row being scrolled onto or off the screen.

The specified double width and height conditions (IR14) are also asserted in two possible ways: a) Automatic split will assert the programmed condition for the current row. b) During soft scroll operation the programmed conditions are asserted for the partial row scrolling onto or off the screen.

R114[7:6] — Double 1

hiss field specifies the conditions (double idtlth/height or normal) of the row desig-ateed in split register 1 (IR12[6:0]). When ɔuuble height tops or bottoms has been ɔeecified, the AVDC will automatically ɡɡɡle between tops and bottoms until ɔoother split 1 or 2 occurs which changes e double height/width condition. If a ɔuuble height tops row is specified, the ɔaan line count will start at zero and incre-ennt the scan line count every other scan ɜes. If a double height bottom row is ɔeecified, the AVDC will start at one half e normal scan line total. If double width sspecified, the AVDC will assert the ADD9/DW output at the falling edge of annk. This condition will also remain ac-ee until the next split 1 or 2. When 0[7] = 1, the values written into bits 7 add 6 of screen start 1 upper will also be ritten into IR14[7:6] and the automatic toggling between tops and bottoms is disabled.

IR14[5:4] — Double 2

This field specifies the conditions (double width/height or normal) of the row designated in split register 2 (IR13[6:0]). Not used when IR0[7] = 1.

IR14[3:0] — Lines to Scroll

This field defines the scan line increment to be used during a soft scroll operation. This value will only be used when scroll start (IR12[7]) and scroll end (IR13[7]) are enabled.

Timing Considerations

Normally, the contents of the initialization registers are not changed during normal operation. However, this may be necessary to implement special display features such as multiple cursors and horizontal scrolling. Table 2 describes timing details for these registers which should be considered when implementing these features.

DISPLAY CONTROL REGISTERS

There are seven registers in this group, each with an individual address. Their formats are illustrated in figure 15. The command register is used to invoke one of 19 possible AVDC commands as described in the COMMANDS section of this data sheet. The remaining registers in the group store address values which specify the cursor location, the location of the first character to be displayed on the screen, and any split screen address locations. The user initializes these registers after powering on the system and changes their values to control the data which is displayed.

Screen Start Registers 1 and 2

The screen start 1 registers contain the address of the first character of the first row (upper left corner of the active display). At the beginning of the first scan line of the first row, this address is transferred to the row start register (RSR) and into the memory address counter (MAC). The counter is then advanced sequentially at the character clock rate for the number of times programmed into the active characters per row register (IR5), thus reaching the address of the last character of the row plus one. At the beginning of each subsequent scan line of the first row, the MAC is reloaded from the RSR and the above sequence is repeated. At the end of the last scan line of the first row, the contents of the MAC is loaded into the RSR to serve as the starting memory address for the second character row. This process is repeated for the programmed number of rows per screen. Thus, the data in the display memory is displayed sequentially starting from the address contained in the screen start register. After the ensuing vertical retrace interval, the entire process repeats again.

During vertical blanking, the address counter operation is modified by stopping the automatic load of the contents of the RSR into the counter, thereby allowing the address outputs to free-run. This allows dynamic memory refresh to occur during the vertical retrace interval. The refresh addressing starts at the last address displayed on the screen and increments by one for each character clock during the retrace interval. If the display buffer last address is encountered, refreshing continues from the display buffer first address.

The sequential operation described above will be modified upon the occurrence of any one of three events. First, if during the incrementing of the memory address counter the 'display buffer last address' (IR9[7:4]) is reached, the MAC will be loaded from the 'display buffer first address' register (IR9[3:0] and IR8[7:0]) at the next character clock. Sequential operation will then resume starting from this address. This wraparound operation allows portions of the display buffer to be used for purposes other than storage of displayable data and is completely automatic without any CPU intervention (see figure 19a).

The sequential row to row addressing can also be modified via split register 1 (IR12) and split register 2 (IR13), under CPU control, or by enabling the row table addressing mode. If bit 6 of screen start register 2 upper (SPL1) is set, the screen start register 2 contents will be loaded automatically into the RSR at the beginning of the first scan line of the row designated by split register 1 (IR12[6:0]). If bit 7 of screen start 2 upper (SPL2) is set, the screen start register 2 contents is automatically loaded into the RSR at the end of the last scan line of the row designated by split register 2 (IR13[6:0]). SPL1 and SPL2 are write only bits and will read as zero when reading screen start register 2.

If the contents of screen start register 1 (upper, lower, or both) are changed during any character row (e.g., row 'n'), the starting address of the next character row (row 'n + 1') will be the new value of the screen start register and addressing will continue

Preliminary

Table 2 TIMING CONSIDERATIONS

PARAMETER	TIMING CONSIDERATIONS
First line of cursor Last line of cursor Underline line	These parameters must be established at a minimum of two character times prior to their occurrence
Double height character rows Double width character rows Rows to scroll	Set/reset prior to the row specified in split 1 or 2 registers
Cursor blink Cursor blink rate Character blink rate	New values become effective within one field after values are changed
Split register 1 Split register 2	Change anytime prior to line zero of desired row
Character rows per screen	Change only during vertical blanking period
Vertical front porch	Change prior to first line of VFP
Vertical back porch	Change prior to fourth line after VSYNC
Screen start register 1 Row table mode enable	Change prior to the horizontal blanking interval of the last line of character row before row where new value is to be used

sequentially from there. This allows features such as split screen operation, partial scroll, or status line display to be implemented. The split screen interrupt feature of the AVDC is useful in controlling the CPU initiated operations. Note that in order to obtain the correct screen display, screen start register 1 must be reloaded with the original (origin of display) value prior to the end of the vertical retrace. See figure 19b.

When row table addressing mode is enabled, the first address of the row table is designated in SSR2. The AVDC fetches the next row's starting address from the table during the blanking interval prior to the first scan line of each character row and loads it into SSR1 for use as the starting address of the next row. Since the contents of SSR2 changes as the table entries are fetched, it must be re-initialized to point to the first table entry during each vertical retrace interval.

The values in the two MSBs of SSR1 upper are multiplexed onto the DADD1/DADD14 and DADD2/DADD15 outputs during the

BIT7	BIT6	BIT5	BIT4	BIT3	BIT2	BIT1	BIT0
COMMAND CODE							
SEE COMMANDS SECTION FOR COMMAND CODES							

COMMAND REGISTERS (WRITE ONLY)

UPPER REGISTER								LOWER REGISTER (LSB)							
BIT7	BIT6	BIT5	BIT4	BIT3	BIT2	BIT1	BIT0	BIT7	BIT6	BIT5	BIT4	BIT3	BIT2	BIT1	BIT0
DADD15	DADD14	MSB's						H'0000' = 0 H'0001' = 1 THRU H'3FFE' = 16,382 H'3FFF' = 16,383					NOTE: MSB's ARE IN UPPER REGISTER [5:0]		

NOTES:
1. Bits 7 and 6 of upper register are not used in the cursor address register.
2. Bits 7 and 6 of upper register are always zero when read by the CPU.
3. When IR0[7] = 1, the values written into bits 7 and 6 of screen start 1 upper will also be written into IR14[7,6] to control the double width and double height attributes of the display as follows:

7	6	Attribute
0	0	None
0	1	Double width only
1	0	Double width and double height tops
1	1	Double width and double height bottoms

SCREEN START 1 REGISTERS (READ AND WRITE)
CURSOR ADDRESS REGISTERS (READ AND WRITE)

UPPER REGISTER								LOWER REGISTER (LSB)							
BIT7	BIT6	BIT5	BIT4	BIT3	BIT2	BIT1	BIT0	BIT7	BIT6	BIT5	BIT4	BIT3	BIT2	BIT1	BIT0
SPL2 0 = OFF 1 = ON	SPL1 0 = OFF 1 = ON	MSB's						H'0000' = 0 H'0001' = 1 THRU H'3FFE' = 16,382 H'3FFF' = 16,383					NOTE: MSB's ARE IN UPPER REGISTER [5:0]		

NOTE:
Bit 7 and bit 6 are always zero when read by CPU.

SCREEN START 2 REGISTERS (READ AND WRITE)

Figure 18. Display Control Register Formats

Preliminary

falling edge of BLANK. If IR0[7] = 0, these two bits act as memory page select bits which may be used to extend the display memory addressing range of the AVDC up to 64K. In that case, these two bits act as a two-bit counter which is incremented each time that 'wraparound' occurs (see above). Note that the counter is incremented at the falling edge of BLANK and that for proper display operation the wraparound address should be programmed to occur at the last character position of a row. Also, the first address accessed in the new page will be the address contained in the display buffer first address register (IR9[3.0] and IR8[7:0]).

Cursor Address Registers

The contents of these registers define the buffer memory address of the cursor. The cursor output will be asserted when the memory address counter matches the value of the cursor address registers for the scan lines specified in IR6. The cursor address registers can be read or written by the CPU or incremented via the 'increment cursor address' command. In independent buffer mode, these registers define a buffer memory address for AVDC controlled access in response to 'read/write at cursor with/without increment' commands, or the first address to be used in executing the 'write from cursor to pointer' command.

INTERRUPT/STATUS REGISTERS

The interrupt and status registers provide information to the CPU to allow it to interact with the AVDC to effect desired changes that implement various display operations. The interrupt register provides information on five possible interrupting conditions, as shown in figure 20. These conditions can be selectively enabled or disabled (masked) from causing interrupts by certain AVDC commands. An interrupt condition which is enabled (mask bit equal to one) will cause the $\overline{INTR}$ output to be asserted and will cause the corresponding bit in the interrupt register to be set upon the occurrence of the interrupting condition. An interrupt condition which is disabled (mask bit equal to zero) has no effect on either the $\overline{INTR}$ output or the interrupt register.

The status register provides six bits of status information: the five possible interrupting conditions plus the RDFLG bit. For this register, however, the contents are not affected by the state of the mask bits.

Descriptions of each interrupt/status register bit follow. Unless otherwise indicated, a bit, once set, will remain set until reset by the CPU by issuing a 'reset interrupt/status bits' command. The bits are also reset by a 'master reset' command and upon power-up.

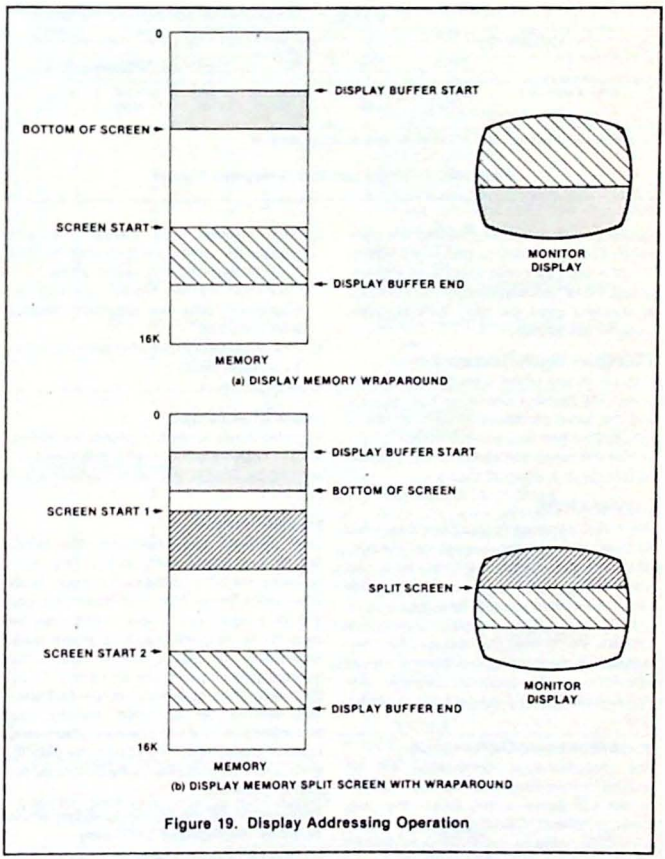

Figure 19. Display Addressing Operation

SR[5] — RDFLG

This bit is present in the status register only. A zero indicates that the AVDC is currently executing the previously issued delayed command. A one indicates that the AVDC is ready to accept a new delayed command.

I/SR[4] — VBLANK

Indicates the beginning of a vertical blanking interval. Set to one at the beginning of the first scan line of the vertical front porch.

I/SR[3] — Line Zero

Set to one at the beginning of the first scan line (line 0) of each active character row.

I/SR[2] — Split Screen 1

This bit is set when a match occurs between the current character row number and the value contained in split register 1, IR12[6:0]. The equality condition is only checked at the beginning of line zero of each character row.

I/SR[1] — Ready

The delayed commands affect the display and may require the AVDC to wait for a

Preliminary

BIT7	BIT6	BIT5	BIT4	BIT3	BIT2	BIT1	BIT0
NOT USED ALWAYS READ AS 0		RDFLG	VBLANK	LINE ZERO	SPLIT 1	READY	SPLIT 2
		0 = BUSY 1 = READY *	0 = NO 1 = YES	0 = NO 1 = YES	0 = NO 1 = YES	0 = BUSY 1 = READY	0 = NO 1 = YES

* STATUS REGISTER ONLY. ALWAYS 0 WHEN READING INTERRUPT REGISTER.

Figure 20. Interrupt and Status Register Format

blanking interval before enacting the command. This bit is set to one when execution of a delayed command has been completed. No other delayed command should be invoked until the prior delayed command is completed.

I/SR[0] — Split Screen 2

This bit is set when a match occurs between the current character row number and the value contained in split register 2 (IR13[6:0]) when you are not scrolling. It is set for the value contained in (split screen register 2) + 1 when scrolling.

COMMANDS

The AVDC commands are divided into two classes: the instantaneous commands which are executed immediately after they are invoked, and the delayed commands which may need to wait for a blanking interval prior to their execution. Command formats are shown in table 3. The commands are asserted by performing a write operation to the command register with the appropriate bit pattern as the data byte.

Instantaneous Commands

The instantaneous commands are executed immediately after the trailing edge of the $\overline{WR}$ pulse during which the command is issued. These commands do not affect the state of the RDFLG or READY interrupt/status bits and can be invoked at any time.

Master Reset

This command initializes the AVDC and can be invoked at any time to return the AVDC to its initial state. Upon power-up, two successive master reset commands must be applied to release the AVDC's internal power on circuits. In transparent and shared buffer modes, the CNTRL1 input must be high when the command is issued. The command causes the following:

1. VSYNC and HSYNC are driven low for the duration of the command and BLANK goes high. After command completion, HSYNC and VSYNC will begin operation and BLANK will remain high until a 'display on' command is received.
2. The interrupt and status bits and masks are set to zero, except for the RDFLG flag which is set to a one.
3. The row buffer mode, cursor-off, display-off, and line graphics disable states are set.
4. The initialization register pointer is set to address IR0.
5. IR2[7] is reset.

Load IR Address

This command is used to preset the initialization register pointer with the value 'V' defined by D3-D0. Allowable values are 0 to 14.

Enable Graphics

After invoking this command, the AVDC will increment the MAC to the next consecutive memory address for each scan line even if more than one scan line per row is programmed. This mode can be used for bit-mapped graphics where each location in the display buffer within the defined area contains the bit pattern to be displayed. This command is row buffered and should be asserted during the character row prior to the row where this feature is required. This allows the user to enter and exit graphics mode on character row boundaries.

To perform split screen operations while in graphics mode use SSR2 only.

DADD0/LG is asserted during the trailing edge of BLANK for each scan line while this mode is active.

Disable Graphics

Normal addressing resumes at the next row boundary.

Display Off

Asserts the BLANK output. The DADD0 through DADD13 display address bus outputs can be optionally placed in the three-state condition by setting bit 2 to a '1' when invoking the command.

Display On

Restores normal blanking operation either at the beginning of the next field (bit 2 = 1) or at the beginning of the next scan line (bit 2=0). Also returns the DADD0-DADD13 drivers to their active state.

Cursor Off

Disables cursor operation. Cursor output is placed in the low state.

Cursor On

Enables normal cursor operation.

Reset Interrupt/Status Bits

This command resets the designated bits in the interrupt and status registers. The bit positions correspond to the bit positions in the registers:

Bit 0 — Split 2
Bit 1 — Ready
Bit 2 — Split 1
Bit 3 — Line zero
Bit 4 — Vertical blank

Disable Interrupts

Sets the interrupt mask to zeros for the designated conditions, thus disabling these conditions from being set in the interrupt register and asserting the $\overline{INTR}$ output. Bit position correspondence is as above.

Enable Interrupts

This command writes the associated interrupt mask bits to a one. This enables the corresponding conditions to be set in the interrupt register and asserts the $\overline{INTR}$ output. Bit position correspondence is as above.

Delayed Commands

This group of commands is utilized for the independent buffer mode of operation, although the 'increment cursor' command can also be used in other modes. With the exception of the 'write from cursor to pointer' and 'increment cursor' commands, all the commands of this type will be executed immediately or will be delayed depending on when the command is invoked. If invoked during the active screen time, the command is executed at the next horizontal blanking interval. If invoked during a vertical retrace interval or a 'display off' state, the command is executed immediately.

The 'increment cursor' command is executed immediately after it is issued and requires approximately three $\overline{CCLK}$ periods for completion. The 'write from cursor to pointer' command executes during blanking intervals. The AVDC will execute as many writes as possible during each blanking interval. If the command is not completed during the current blanking interval, the command will be held in suspension during the next active portion of the screen and continues during the next blanking interval until the command is completed.

Preliminary

In all cases, the AVDC will assert the READY/RDFLG status to signify completion of the delayed command. No other delayed command should be given until the previous delayed command has completed. Therefore, the READY interrupt or RDFLG status flag should be used for handshaking control between the AVDC and CPU when using the delayed commands.

Read/Write at Pointer

Transfers data between the display buffer and the bus interface latch using the address contained in the pointer registers.

Read/Write at Cursor

Transfers data between the display buffer and the bus interface latch using the address contained in the cursor registers.

Increment Cursor

Adds one (modulo 16K) to the cursor address registers.

Read/Write at Cursor and Increment

Transfers data between the display buffer and the bus interface latch using the address contained in the cursor registers and then adds one (modulo 16K) to the cursor address registers.

Write from Cursor to Pointer

Writes the data contained in the bus interface latch into the block of display memory designated by the cursor address and pointer address registers, inclusive. After completion of the command, the pointer address will be unchanged, but the cursor register contents will be equal to the pointer address.

Table 3 AVDC COMMAND FORMATS

D7	D6	D5	D4	D3	D2	D1	D0		COMMAND
Instantaneous Commands:									
0	0	0	0	0	0	0	0		Master reset
0	0	0	1	V	V	V	V		Load IR pointer with value V (V = 0 to 14)
0	0	1	d	d	d	1	0[1]		Disable graphics
0	0	1	d	d	d	1	1[2]		Enable graphics
0	0	1	d	1	N	d	0[1]		Display off. Float DADD bus if N = 1
0	0	1	d	1	N	d	1[2]		Display on: Next field (N = 1) or scan line (N = 0)
0	0	1	1	d	d	d	0[1]		Cursor off
0	0	1	1	d	d	d	1[2]		Cursor on
0	1	0	N	N	N	N	N		Reset interrupt/status: Bit reset where N = 1
1	0	0	N	N	N	N	N		Disable interrupt: Disable where N = 1
0	1	1	N	N	N	N	N		Enable interrupt: Enables interrupts where N = 1
			V B	L Z	S P 1	R D Y	S P 2		**Interrupt Bit Assignments**
Delayed Commands:								**Hex**	
1	0	1	0	0	1	0	0	A4	Read at pointer address
1	0	1	0	0	0	1	0	A2	Write at pointer address
1	0	1	0	1	0	0	1	A9	Increment cursor address
1	0	1	0	1	1	0	0	AC	Read at cursor address
1	0	1	0	1	0	1	0	AA	Write at cursor address
1	0	1	0	1	1	0	1	AD	Read at cursor address and increment address
1	0	1	0	1	0	1	1	AB	Write at cursor address and increment address
1	0	1	1	1	0	1	1	BB	Write from cursor address to pointer address
1	0	1	1	1	1	0	1	BD	Read from cursor address to pointer address

NOTES:
1. Any combination of these three commands is valid.
2. Any combination of these three commands is valid.
3. d = don't care.

ABSOLUTE MAXIMUM RATINGS[1]

PARAMETER	RATING	UNIT
Operating ambient temperature[2]	0 to + 70	°C
Storage temperature	− 65 to + 150	°C
All voltages with respect to ground[3]	− 0.5 to + 6.0	V

DC ELECTRICAL CHARACTERISTICS $T_A = 0°C$ to $+70°C$, $V_{CC} = 5.0V \pm 5\%$[4,5,6]

	PARAMETER	TEST CONDITIONS	LIMITS Min	Typ	Max	UNIT
V_{IL}	Input low voltage				0.8	V
V_{IH}	Input high voltage		2.0			V
V_{OL}	Output low voltage	$I_{OL} = 2.4mA$			0.4	V
V_{OH}	Output high voltage (except $\overline{INTR}$ output)	$I_{OH} = -200\mu A$	2.4			V
I_{IL}	Input leakage current	$V_{IN} = 0$ to V_{CC}	− 10		10	μA
I_{LL}	Data bus 3-state leakage current	$V_O = 0$ to V_{CC}	− 10		10	μA
I_{OD}	$\overline{INTR}$ open drain output leakage current	$V_O = 0$ to V_{CC}			10	μA
I_{CC}	Power supply current				160	mA

Preliminary

AC ELECTRICAL CHARACTERISTICS $T_A = 0°C$ to $+70°C$, $V_{CC} = 5.0V \pm 5\%$ [4,5,6,7,8]

PARAMETER		TEST CONDITIONS	TENTATIVE LIMITS 2.7MHz Min	2.7MHz Max	4.0MHz Min	4.0MHz Max	UNIT
Bus Timing (Fig. 21)[9]							
t_{AS}	A0-A2 setup time to $\overline{WR}$, $\overline{RD}$ low		30		30		ns
t_{AH}	A0-A2 hold time from $\overline{WR}$, $\overline{RD}$ high		0		0		ns
t_{CS}	$\overline{CE}$ setup time to $\overline{WR}$, $\overline{RD}$ low		0		0		ns
t_{CH}	$\overline{CE}$ hold time from $\overline{WR}$, $\overline{RD}$ high		0		0		ns
t_{RW}	$\overline{WR}$, $\overline{RD}$ pulse width		250		200		ns
t_{DD}	Data valid after $\overline{RD}$ low			200		200	ns
t_{DF}	Data bus floating after $\overline{RD}$ high			100		100	ns
t_{DS}	Data setup time to $\overline{WR}$ high		150		150		ns
t_{DH}	Data hold time from $\overline{WR}$ high		10		5		ns
t_{CC}	High time from $\overline{CE}$ to $\overline{CE}$						
	Consecutive commands		t_{CCP}		t_{CCP}		ns
	Other accesses		300		300		ns
CCLK Timing (Fig 22, 23, 24)							
t_{CCP}	CCLK period		370	10,000	250	10,000	ns
t_{CCH}	$\overline{CCLK}$ high time		125		100		ns
t_{CCL}	$\overline{CCLK}$ low time		125		100		ns
	Output delay from $\overline{CCLK}$ edge						
t_{CCD1}	DADD0-13, MBC		40	175	40	150	ns
t_{CCD2}	BLANK, HSYNC, VSYNC/CSYNC, CURSOR, $\overline{BEXT}$, $\overline{BREQ}$, $\overline{BACK}$, $\overline{BCE}$, $\overline{WDB}$, $\overline{RDB}$[10]		40	225	40	200	ns
Other Timings (Fig 23)							
t_{RDL}	READY/RDFLG low from $\overline{WR}$ high[9]			t_{CCP} + 30		t_{CCP} + 30	ns
t_{BAK}	$\overline{BACK}$ high from $\overline{PBREQ}$ low			225		200	ns
t_{BXT}	$\overline{BEXT}$ high from $\overline{PBREQ}$ high			225		200	ns
t_{IRL}	$\overline{INTR}$ low from $\overline{CCLK}$ low			225		200	ns
t_{IRH}	$\overline{INTR}$ high from $\overline{WR}$, $\overline{RD}$ high[9]			600		600	ns
t_{AC}	ACLL from HSYNC		$3xt_{CCP}$		$3xt_{CCP}$		ns
Row Table Input Timing (Fig. 24)							
t_{DSRT}	Data setup time to $\overline{CCLK}$ low		100		60		ns
t_{DHRT}	Data hold time from $\overline{CCLK}$ low		60		60		ns

NOTES

1. Stresses above those listed under Absolute Maximum Ratings may cause permanent damage to the device. This is a stress rating only and functional operation of the device at these or at any other condition above those in the operation section of this specification is not implied.
2. For operating at elevated temperatures, the device must be derated based on + 150°C maximum junction temperature.
3. This product includes circuitry specifically designed for the protection of its internal devices from damaging effects of excessive static charge. Nonetheless, it is suggested that conventional precautions be taken to avoid applying any voltages larger than the rated maxima.
4. Parameters are valid over specified temperature range.
5. All voltage measurements are referenced to ground (GND).
6. Typical values are at +25°C, typical supply voltages, and typical processing parameters.
7. For testing, all input signals swing between 0.4V and 2.4V with a transition time of 20ns maximum. All time measurements are referenced at input voltages of 0.8V and 2.0V and output voltages of 0.8V and 2.0V as appropriate.
8. Test condition for outputs: $C_L = 150pF$.
9. Timing is illustrated and specified referenced to $\overline{WR}$ and $\overline{RD}$ inputs. Device may also be operated with $\overline{CE}$ as the 'strobing' input. In this case, all timing specifications apply referenced to falling and rising edges of $\overline{CE}$.
10. $\overline{BCE}$, $\overline{WDB}$, and $\overline{RDB}$ delays track each other within 10nsec. Also, these output delays will tend to follow direction (min/max) of DADD0-13 delays.

Preliminary

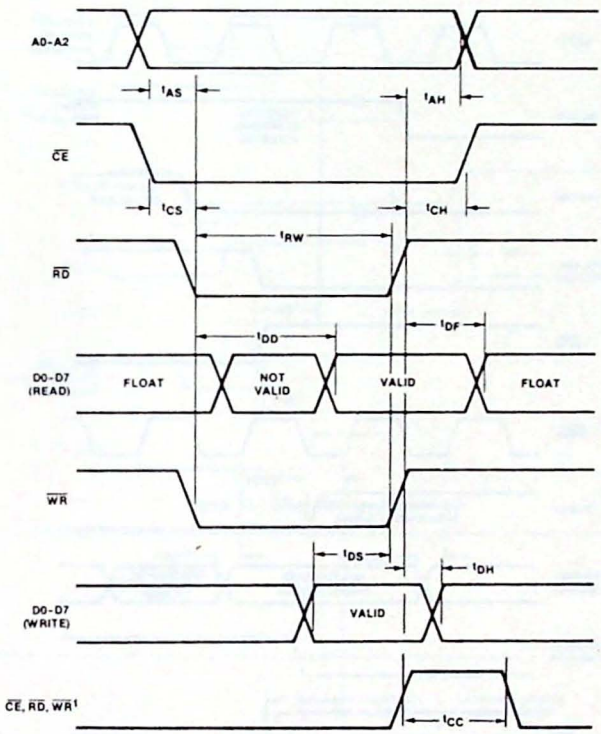

NOTE
1. Any two must be high for t_{CC}

Figure 21. Bus Timing

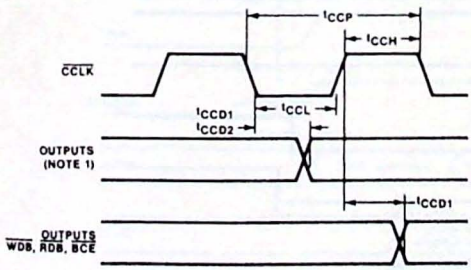

NOTES
1. DADD0-DADD13, BLANK, HSYNC, CSYNC/VSYNC, CURSOR, $\overline{BEXT}$, $\overline{BREQ}$, $\overline{BCE}$, MBC, BACK.
2. $\overline{BCE}$ CHANGES STATE ON BOTH $\overline{CCLK}$ EDGES—(see Figures 3 and 4)

Figure 22. $\overline{CCLK}$ Timing

Preliminary

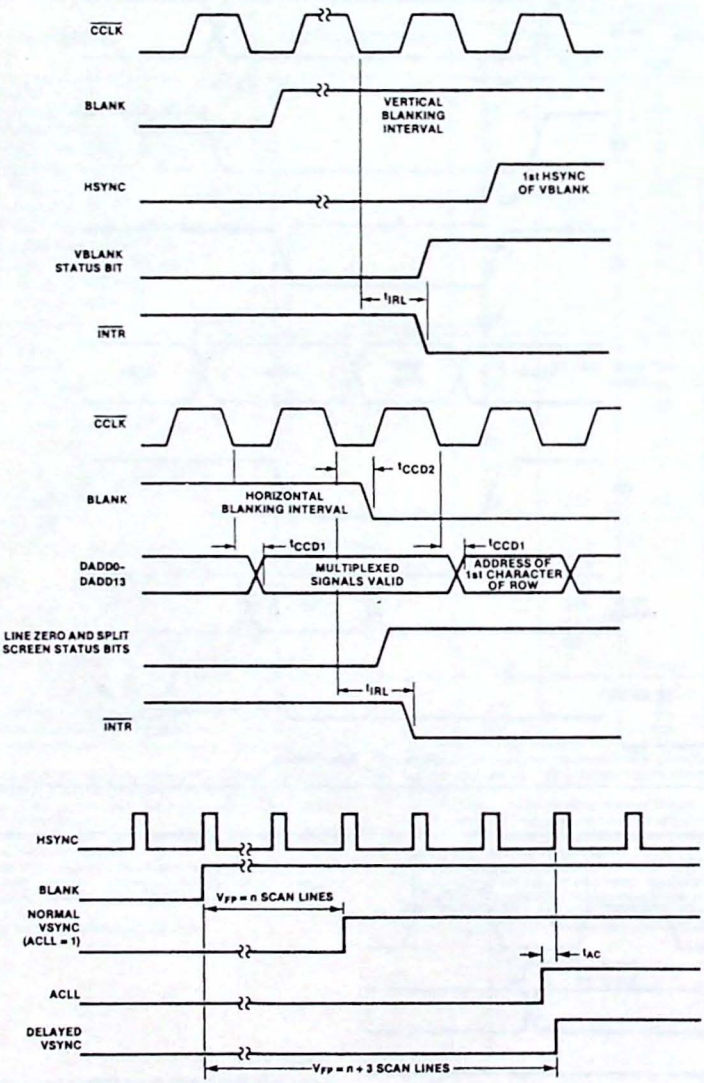

Figure 23. Other Timings

Preliminary

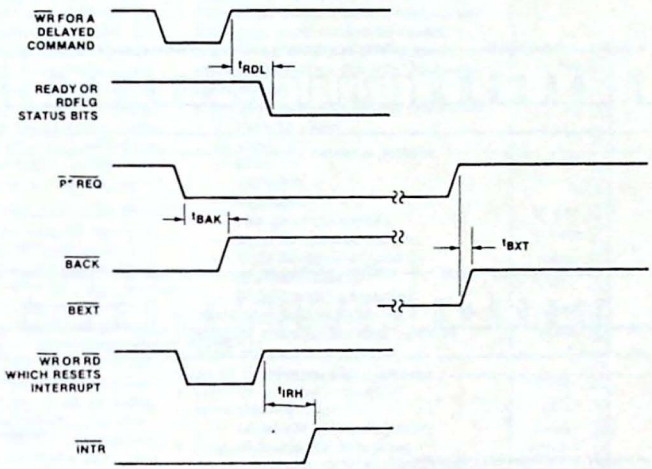

Figure 23. Other Timings (Continued)

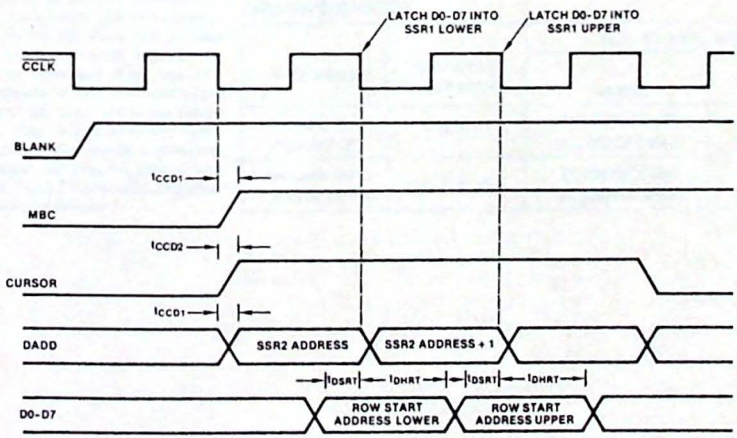

Figure 24. Row Table Fetch I/O Timing

Preview

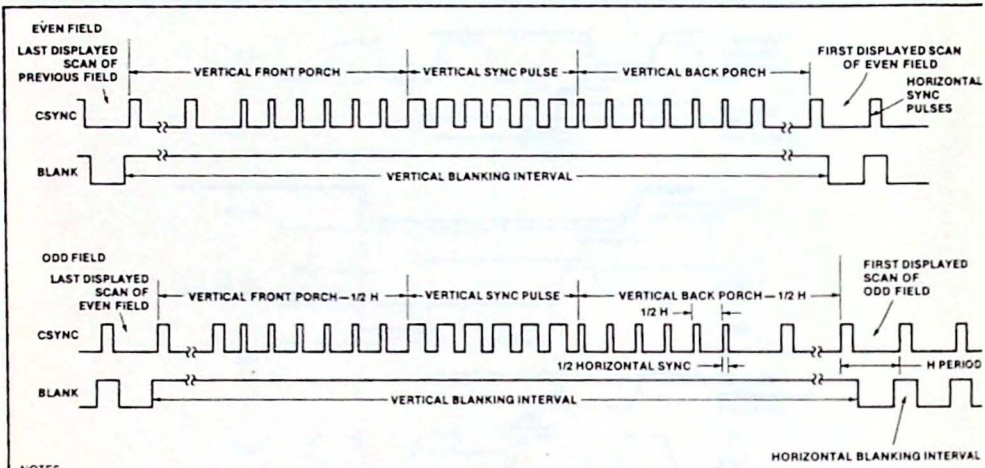

NOTES
1. In non-interlaced operation the even field is repeated continuously.
2. In interlaced operation the even field alternates with the odd field.

Figure 25. Composite Sync Timing

Preliminary

DESCRIPTION

The Signetics SCB2675 Color/Monochrome Attributes Controller (CMAC) is a bipolar LSI device designed for CRT terminals and display systems that employ raster scan techniques. It contains a programmable dot clock divider to generate a character clock, a high speed shift register to serialize input dot data into a video stream, latches and logic to apply visual attributes to the resulting display, and logic to display a cursor on the display.

The CMAC provides control of visual attributes on a character by character basis for two operating modes: monochrome and color. The monochrome mode provides reverse video, blank, highlight and two general purpose user definable attributes. In this mode, the display characters can be specified to appear on either a light or dark screen background. Retrace video suppression can be automatically or externally controlled. The color mode provides eight colors for foreground (character) video and eight colors for background video together with a luminance output for external color set selection or to simultaneously drive a monochrome monitor. Additionally, both modes provide double width, underline, blink, dot stretching and dot width attributes. In monochrome mode, the SCB2675 emulates the attribute characteristics of Digital Equipment Corporation's VT100 terminal.

The horizontal dot frequency is the basic timing input to the CMAC. This clock is divided internally to provide a character clock output for system synchronization. Up to ten bits of dot data are parallel loaded into the video shift register on each character boundary. The two TTL video data outputs in monochrome mode are encoded to provide four video intensities (black, gray, white and highlight). The video data in color mode is encoded to provide eight foreground colors and shifted out on three TTL outputs, together with the luminance output.

FEATURES

- **25 and 18MHz video dot rate versions***
- **Four video intensities encoded on two TTL outputs (monochrome mode)**
- **Eight foreground and background colors encoded on three TTL outputs (color mode)**
- **Internally latched character attributes:**
  - **Reverse video**
  - **Blank**
  - **Blink**
  - **Underline**
  - **Highlight**
  - **Two general purpose**
  - **Eight foreground colors**
  - **Eight background colors**
  - **Dot width control**
  - **Double width characters**
- **VT100 compatible attributes**
- **Reverse video cursor with optional white cursor in color mode**
- **Up to 10 dots per character**
- **Light or dark background in monochrome mode**
  - **Automatic retrace blanking**
- **Programmable dot stretching**
- **Compatible with SCN2674 AVDC and SCN2670 DCGG**
- **TTL compatible**
- **40-pin dual in-line package**

APPLICATIONS

- **CRT terminals**
- **Word processing systems**
- **Small business computers**

*For faster versions consult factory.

PIN CONFIGURATION

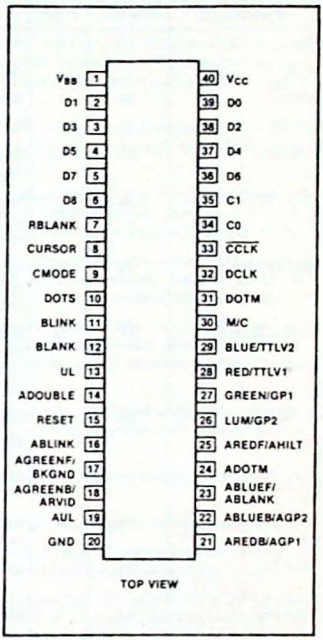

ORDERING CODE

PACKAGES	DOTS PER CHARACTER	V_{CC} = 5V ± 5%, 0°C to +70°C	
		25MHz	18MHz
Ceramic DIP Plastic DIP	7, 8, 9, 10	SCB2675BC5I40 SCB2675BC5N40	SCB2675BC8I40 SCB2675BC8N40
Ceramic DIP Plastic DIP	6, 8, 9, 10	SCB2675CC5I40 SCB2675CC5N40	SCB2675CC8I40 SCB2675CC8N40

Preliminary

PIN DESIGNATION

MNEMONIC	PIN NO.	TYPE	NAME AND FUNCTION
V_{CC}	40	I	**Power Supply:** +5VDC
V_{BB}	1	I	**Bias Supply:** See figure 5
GND	20	I	**Ground:** 0V reference
DCLK	32	I	**Dot Clock:** Dot frequency input. Video output shift rate.
$\overline{CCLK}$	33	O	**Character Clock:** An output which is a submultiple of DCLK. The period ranges from 7 to 10 DCLK periods per cycle and is determined by the state of the C0-C1 inputs.
RED/TTLV1	28	O	**Red/TTL Video 1:** In color mode, this output provides the red gun serial video. In monochrome mode, it should be used with the blue/TTL video 2 output to decode four video intensities.
BLUE/TTLV2	29	O	**Blue/TTL Video 2:** In color mode, this output provides the blue gun serial video. In monochrome mode, it should be used with the red/TTL video 1 output to decode four video intensities.
GREEN/GP1	27	O	**Green/General Purpose 1:** In color mode, this output provides the green gun serial video. In monochrome mode, it is a general purpose TTL output which is asserted if the AREDB/AGP1 input is asserted when the corresponding character dot data is loaded into the video shift register.
LUM/GP2	26	O	**Luminance/General Purpose 2:** In color mode, this output is the logical-OR of the RGB foreground video. It is low during a blanking interval and during the foreground portion of the cursor display. In monochrome mode, it is a general purpose TTL output which is asserted if the ABLUEB/AGP2 input is asserted when the corresponding character dot data is loaded into the video shift register.
UL	13	I	**Underline Timing:** Indicates the scan line(s) for the underline attribute. Latched on the falling edge of BLANK.
BLINK	11	I	**Blink Timing:** This input is sampled on the falling edge of BLANK to provide the blink rate for the blink attribute. Should be a submultiple of the frame rate.
BLANK	12	I	**Screen Blank:** When high, this input forces the video outputs to the specified background color in color mode and to the level specified by the BKGND input (either black or gray) in monochrome mode.
RBLANK	7	I	**Retrace Blank:** This input is used to force the video outputs to a low during retrace periods. If pulled high, it will automatically suppress video during the retrace periods when BLANK is high. The user may also pulse this input while BLANK is high to selectively suppress raster video.
AGREENF/BKGND	17	I	**Green Foreground/Background Intensity:** In color mode, this input activates the GREEN/GP1 output during the foreground (character video) portion of the associated character block. In monochrome mode, this input specifies gray or black screen background.
ABLUEF/ABLANK	23	I	**Blue Foreground/Blank Attribute:** In color mode, this input activates the BLUE/TTLV2 output during the foreground (character video) portion of the associated character block. In monochrome mode, this input generates a blank space for the associated character. The blank space intensity is controlled by the AGREENF/BKGND input, the reverse video attribute and cursor input.
AREDF/AHILT	25	I	**Red Foreground/Highlight Attribute:** In color mode, this input activates the RED/TTLV1 output during the foreground (character video) portion of the associated character block. In monochrome mode, this input highlights the associated character (including underline).
CURSOR	8	I	**Cursor Timing:** This input provides the timing for the cursor video. In color mode, with CURSOR and CMODE high, the RGB outputs are driven high (white cursor). If CMODE is low, or in monochrome mode, this input reverses the intensities of the video and attributes. Cursor position, shape, and blink rate are controlled by this input.
CMODE	9	I	**Cursor Mode:** Used in color mode only. When CURSOR and CMODE are high, the RGB outputs are driven high (white cursor). When CURSOR is high and CMODE is low, the RGB outputs are logically inverted (reverse video cursor).
AUL	19	I	**Underline Attribute:** Specifies a line to be displayed in the character block. The specific line(s) are specified by the UL input. All other attributes apply to the underline video.

Preliminary

PIN DESIGNATION (Continued)

MNEMONIC	PIN NO.	TYPE	NAME AND FUNCTION
ABLINK	16	I	**Blink Attribute:** In color mode, this active high input will drive the foreground RGB combination to the background RGB combination. In monochrome mode, the associated character or background is driven to the intensity determinnd by BKGND, reverse video attribute and the cursor input.
ADOUBLE	14	I	**Double Width Attribute:** This active high input causes the associated character video to be shifted out of the serial shift register at one half the dot frequency (DCLK). The $\overline{CCLK}$ output is not affected.
AREDB/AGP1	21	I	**Red Background/General Purpose Attribute 1:** In color mode, this input activates the RED/TTLV1 output during the background portion of the associated character block. In monochrome mode, it activates the GREEN/GP1 output for the associated character block.
ABLUEB/AGP2	22	I	**Blue Background/General Purpose Attribute 2:** In color mode, this input activates the BLUE/TTLV2 output during the background portion of the associated character block. In monochrome mode, it activates the LUM/GP2 output for the associated character block.
AGREENB/ARVID	18	I	**Green Background/Reverse Video Attribute:** In color mode, this input activates the GREEN/GP1 output during the background portion of the associated character block. In monochrome mode, it causes the associated character block video intensities to be reversed.
D0-D8	36-39, 2-6	I	**Dot Data Input:** These are parallel inputs corresponding to the character/graphic symbol dot data for a given scan line. These inputs are strobed into the video shift register on the trailing (falling) edge of each character clock ($\overline{CCLK}$).
C0-C1	34-35	I	**Character Clock Control:** The states of these two static inputs determine the internal divide factor for the $\overline{CCLK}$ output rate.
RESET	15	I	**Reset:** This active high input initializes the internal logic and resets the attribute latches.
M/C	30	I	**Monochrome/Color Mode:** This input selects whether the CMAC operates in monochrome or color mode. A low selects color mode and a high selects monochrome mode.
ADOTM	24	I	**Dot Modulation Attribute:** When DOTM and this input are high, the active dot width of the associated character video is one DCLK. When DOTM is high and this input is low, the active dot width of the associated character video is two DCLKs.
DOTM	31	I	**Dot Width Modulation:** When this input is high, two DCLKs are used for each dot shifted through the shift register. When this input is low, one DCLK is used.
DOTS	10	I	**Dot Stretching:** Sampled at the falling edge of BLANK. When this input is high, one extra dot is appended to individual dots or groups of dots of the input parallel data and then transferred through the shift register. When this input is low, normal transfer of input parallel data results.

Preliminary

BLOCK DIAGRAM

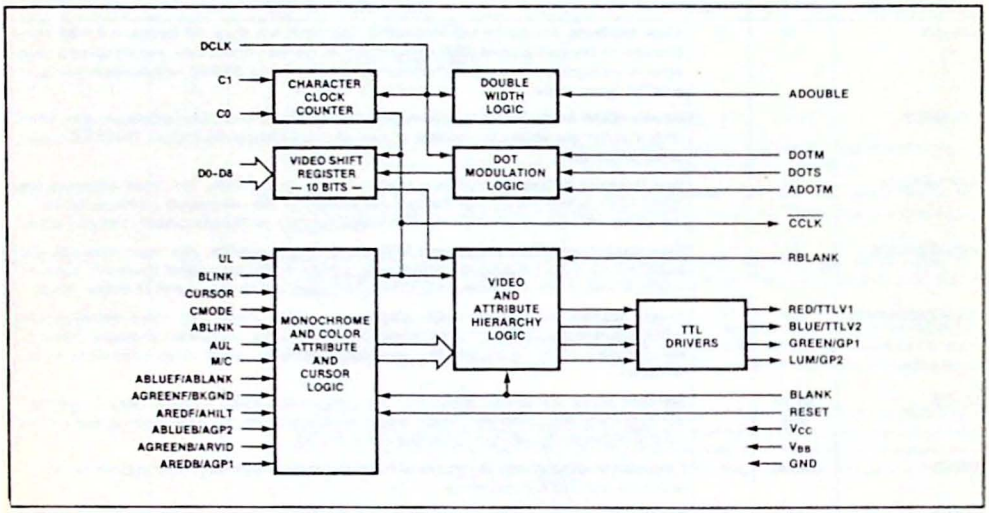

FUNCTIONAL DESCRIPTION

The CMAC consists of seven major sections (see block diagram). The high speed dot clock input is applied to a programmable divider to provide a character clock output for system timing. Parallel dot data is loaded into the video shift register on character boundaries and shifted into the video logic block at the dot rate specified by the dot modulation section. The appropriate attribute control inputs are selected by the mode select logic, latched internally on character boundaries, and combined with the serial dot data to provide monochrome or color video outputs.

The BLANK input defines the active screen area. In color mode, the video outputs are forced to the specified background color when this signal is asserted; in monochrome mode the video outputs are forced to the states defined by the BKGND input, i.e., black if dark background is selected and gray if light background is selected. A separate RBLANK input allows the user to select the amount of border around the active area when operating in color mode or in monochrome mode with light background. This input can be tied high, in which case the area outside the active area will be dark, or it may be pulsed during BLANK periods to externally control the border widths.

In color mode, eight colors for the character (foreground) and eight colors for the background (area other than character) can be selected by the attribute inputs. In monochrome mode, the intensities of foreground and background are a function of the attribute and BKGND inputs, i.e., characters may be black, gray, white, or highlight (very white) while background may be black, gray, or white (see Table 1).

Table 1 MONOCHROME MODE ATTRIBUTE CHARACTERISTICS

REV[1]	AHILT	ABLINK[2]	FOREGROUND VIDEO	BACKGROUND VIDEO
0	0	0	W	B
0	0	1	W/G	B
0	1	0	H	B
0	1	1	H/W	B
1	0	0	B	G
1	0	1	B/W	G/B
1	1	0	B	W
1	1	1	B/H	W/B

NOTES

1. REV = (BKGND) XOR (ARVID):

BKGND	ARVID	REV
0	0	0
0	1	1
1	0	1
1	1	0

2. For blinking, the video outputs are shown as 0/1, where 0 and 1 are the blink timing input states.
3. Foreground includes underline when underlining is specified by AUL = 1.
4. When ABLANK = 1, foreground component becomes same as background component.
5. Codes for video outputs are as follows:

CODE	TTLV2	TTLV1	BEAM INTENSITY
B	0	0	Black
G	0	1	Gray
W	1	0	White
H	1	1	Highlight

Preliminary

Character Clock Counter

The character clock counter divides the DCLK input to generate the character clock ($\overline{CCLK}$). The divide factor is specified by the clock control inputs (C1-C0) as follows:

C1	C0	SCB2675B DOTS/ CHAR.	SCB2675B $\overline{CCLK}$ DUTY CYCLE*
0	0	10	5/5
0	1	7	4/3
1	0	8	4/4
1	1	9	5/4

*High/low

C1	C0	SCB2675C DOTS/ CHAR.	SCB2675C $\overline{CCLK}$ DUTY CYCLE*
0	0	10	5/5
0	1	6	3/3
1	0	8	4/4
1	1	9	5/4

*High/low

The number of dot clocks/character is normally the number of dots/character as listed above. However, when dot width control is specified, the DCLK input is divided by two before it is applied to the character clock counter resulting in the number of dot clocks/character being double those listed above, although the number of displayed dots/character remains the same. See Dot Modulation section of this data sheet.

Video Shift Register

On each character boundary, the parallel input dot data (D0-D8) is loaded into the video shift register. The data is shifted out least significant bit first (D0) at the DCLK rate. If 10 dots/character are specified (C1-C0 = 00), the tenth dot will be the same as D8. The serial dot data from the video shift register is routed to the video logic where it is combined with the cursor and attribute control bits to produce the video data outputs.

Mode Select, Attribute and Cursor Control

The mode select logic multiplexes the monochrome and color attribute inputs and outputs as specified by the M/C input. The monochrome mode provides blank, reverse video, highlight and two general purpose attributes. The latter may be used, with external logic, to combine other attributes (e.g., overscore) into the video stream. The color mode provides RGB foreground and background color attributes. Both modes provide double width characters, blink, underline, dot width control and dot stretching.

The cursor and attribute inputs are pipelined internally to allow for system pipeline propagations. The cursor input signal is delayed internally by two $\overline{CCLK}$s (one for RAM and one for the character generator), while the attribute inputs are delayed for one $\overline{CCLK}$ to account for the delay of the character data through the character generator latches. The attribute timing inputs (BLINK, UL and DOTS) are clocked into the 2675 at the beginning of each scan line time by the falling edge of BLANK. Thus, these inputs must be in their proper state at the falling edge of BLANK preceding the scan line where they are required to be active. The BLANK signal itself is also delayed internally to provide for the RAM and character generator delays (see figures 6 and 7). Internal delays cause the video outputs to be delayed relative to $\overline{CCLK}$ as illustrated in figure 8.

Video Logic

Each character block consists of the three components shown in figure 1. Symbol video is generated from the dot data inputs D0-D8. Underline video is enabled by the AUL attribute and is generated during the scan lines for which the UL input is active. Underline and symbol video are always the same intensity or color, and other attributes (e.g., ABLINK) apply to them equally. The combination of underline and symbol video is also referred to as foreground video. Background video is the area of the character block corresponding to the absence of foreground video. The assertion of the non-display attribute (ABLANK) causes the entire character block to be displayed as background.

In monochrome mode, the serial dot data and pipelined cursor and attributes are combined to generate four video intensities (black, gray, white and highlight) which are encoded on the TTLV1 and TTLV2 outputs as follows:

TTLV2	TTLV1	VIDEO INTENSITY
0	0	Black
0	1	Gray
1	0	White
1	1	Highlight

Table 1 describes the relationship between attributes and video intensity of the foreground and background components of the character block in monochrome mode.

In color mode, the colors of the foreground and background components are specified by the corresponding attribute inputs; AREDF, AGREENF and ABLUEF dictate the color of the foreground component while AREDB, AGREENB and ABLUEB do the same for the background component. In this mode, the serial dot data and pipelined cursor and attributes are combined to generate four video outputs. The RED, GREEN and BLUE outputs separately contain the corresponding foreground and background components. The LUM output is the logical-OR of the foreground colors and can be used to drive a separate monochrome monitor or to select a different set of colors for the foreground.

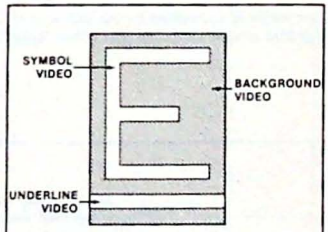

Figure 1. Character Block Definition

Preliminary

Dot Modulation Logic

The dot modulation logic controls the video shift register to supply dot stretching and dot width control.

Dot stretching is controlled by the DOTS input which is sampled each scan line at the trailing (falling) edge of BLANK. If DOTS is asserted at that time, all characters on the following scan line will have dot stretching applied. Dot stretching causes an extra dot to be added to individual dots or groups of dots as shown in figures 2 and 3. Dot stretching can be used to:

1. Compensate for low video bandwidth monitors (since the minimum active displayed segment with dot stretching is two DCLKs).
2. Assure crisp black characters when operating in white background mode.
3. Provide thick characters as a means of distinguishing areas of the display.

Dot width is controlled by the DOTM and ADOTM inputs. DOTM is tied either high, which enables the feature on the entire display, or low, which disables the feature. With ADOTM high, the dot width of characters can be selectively controlled by assertion of the ADOTM attribute input. When operating in this mode, the dot clock input is divided by two before being applied to other circuits in the CMAC. This affects the $\overline{CCLK}$ output.

When dot width control is enabled as above, two DCLKs are used for each video dot period. Asserting ADOTM for a particular character will cause each active video dot of the displayed character to be turned on for one DCLK and off for the other DCLK, while if ADOTM is negated for that character, the active video dot for that character will be turned on (black background) or off (white background) for both DCLK times (see figures 2 and 4). Only the character video component of the character block is modulated. Underline video and background are not affected by on-time modulation. Width control can be used to:

1. Make horizontal lines and vertical lines appear the same brightness on the display.
2. Provide two different brightness levels for characters without requiring a monitor with analog brightness inputs.

However, note that the effects produced by this feature are highly dependent on the video amplifier characteristics of the monitor used.

Double Width Logic

The double width logic controls the rate at which dots are shifted through the video shift register. When the ADOUBLE input is asserted, the associated character video will be shifted at one half the DCLK rate, and the dot information for the next character will be loaded into the shift register two $\overline{CCLK}$s later. The $\overline{CCLK}$ output is not affected. If a double width character is specified at the last location of a character row, the second half of the double width character (one $\overline{CCLK}$) will extend into the horizontal front porch.

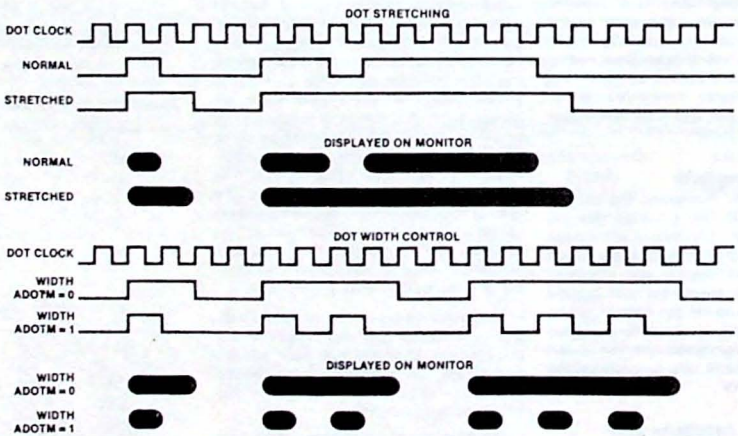

Figure 2. Dot Modulation Timing

Preliminary

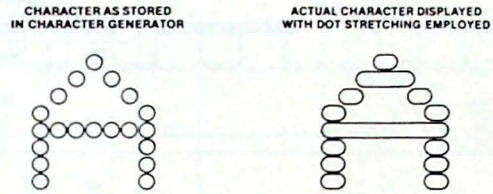

Figure 3. Dot Stretching

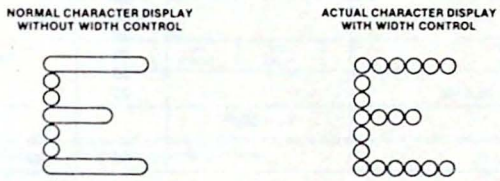

Figure 4. Dot Width Control

ABSOLUTE MAXIMUM RATINGS[1]

PARAMETER	RATING	UNIT
Operating ambient temperature[2]	0 to +70	°C
Storage temperature	−65 to +150	°C
All voltages with respect to ground[3]	−0.5 to +6.0	V

DC ELECTRICAL CHARACTERISTICS $T_A = 0°C$ to $+70°C$, $V_{CC} = 5V \pm 5\%$, V_{BB} = figure 5[4,5,6]

PARAMETER		TEST CONDITIONS	LIMITS			UNIT
			Min	Typ	Max	
V_{IL}	Input low voltage				0.8	V
V_{IH}	Input high voltage		2.0			V
V_{OL}	Output low voltage	$I_{OL} = 4mA$			0.4	V
V_{OH}	Output high voltage	$I_{OH} = -400\mu A$	2.4			V
I_{IL}	Input low current	$V_{IN} = 0.4V$				
	DCLK				−800	μA
	All other inputs				−400	μA
I_{IH}	Input high current	$V_{IN} = 2.4V$				
	DCLK				40	μA
	All other inputs				20	μA
I_{CC}	V_{CC} supply current	$V_{IN} = 0V$, V_{CC} = max			80	mA
I_{BB}	V_{BB} supply current	Figure 5			120	mA

Preliminary

AC ELECTRICAL CHARACTERISTICS $T_A = 0°C$ to $+70°C$, $V_{CC} = 5V \pm 5\%$, V_{BB} = figure 5[4,5,6]

PARAMETER	TEST CONDITIONS	TENTATIVE LIMITS				UNIT
		25MHz VERSION		18MHz VERSION		
		Min	Max	Min	Max	
Dot clock timing[7]						
f_D Frequency			25		18	MHz
t_{DH} High time		15		22		ns
t_{DL} Low time		15		22		ns
Setup times[8]						
t_{SB} BLANK to $\overline{CCLK}$		40		50		ns
t_{SA} Attributes to $\overline{CCLK}$		40		50		ns
t_{SD} D0–D9 to $\overline{CCLK}$		70		70		ns
t_{SK} CURSOR to $\overline{CCLK}$		40		50		ns
t_{SC} C0, C1 to DCLK		30		35		ns
t_{SR} RBLANK to DCLK		20		20		ns
t_{SM} BLINK, UL, DOTS to BLANK		20		20		ns
Hold times[8]						
t_{HB} BLANK from $\overline{CCLK}$		20		20		ns
t_{HA} Attributes from $\overline{CCLK}$		20		20		ns
t_{HD} D0–D8 from $\overline{CCLK}$		30		30		ns
t_{HK} CURSOR from $\overline{CCLK}$		20		20		ns
t_{HC} C0, C1 from DCLK		20		20		ns
t_{HR} RBLANK from DCLK		20		20		ns
t_{HM} BLINK, UL, DOTS from BLANK		20		20		ns
Delay times[7]	$C_L = 50pF$					
t_{DC} $\overline{CCLK}$ from DCLK			55		70	ns
t_{DV} Other outputs from DCLK		30	60	35	70	ns

NOTES

1. Stresses above those listed under Absolute Maximum Ratings may cause permanent damage to the device. This is a stress rating only and functional operation of the device at these or at any conditions other than those described in the AC and DC Electrical Characteristics section of this specification is not implied.
2. For operating at elevated temperatures, the device must be derated based on +150°C maximum junction temperature.
3. This product includes circuitry specifically designed for the protection of its internal devices from damaging effects of excessive static charge. Nonetheless, it is suggested that conventional precautions be taken to avoid applying voltages greater than the rated maxima.
4. Parameters are valid over operating temperature range unless otherwise specified.
5. All voltage measurements are referenced to ground. For testing, all input signals swing between 0.4V and 2.4V with a transition time of 3ns maximum. All time measurements are referenced at input voltages of 0.8V and 2.0V and at output voltages of 0.8V and 2.0V as appropriate.
6. Typical values are at +25°C, typical supply voltages and typical processing parameters.
7. See figure 8.
8. See figures 6, 7, 9, and 10.

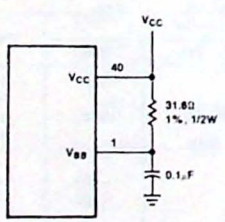

Figure 5.
Recommended V_{BB} Test Circuit

Preliminary

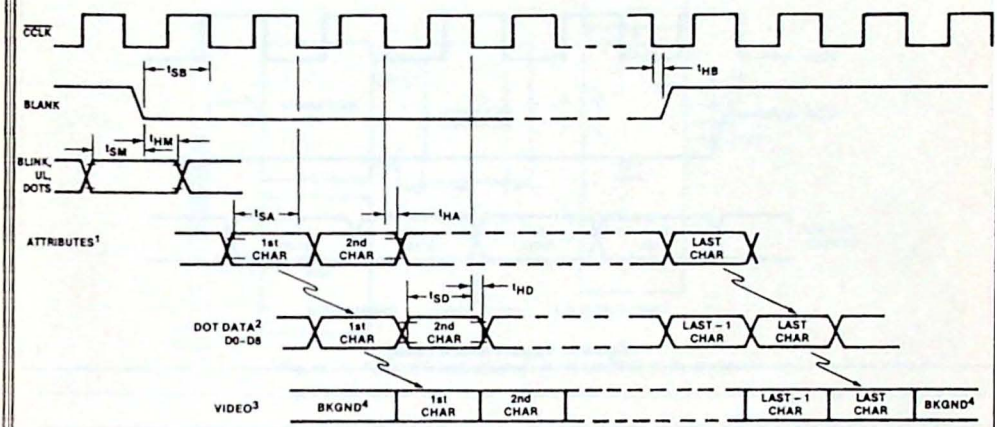

NOTES:
1. Attributes include: ABLINK, ABLANK, ARVID, AUL, AHILT, ADOUBLE, ADOTM, two general purpose, and foreground/background colors.
2. One CCLK delay for dot data (obtained from delay through character generator).
3. See figure 8 for detail timing of video outputs.
4. Non-active scan time. VIDEO reverts to polarity selected by the BKGND input in monochrome mode.

Figure 6. CMAC Pipeline Timing

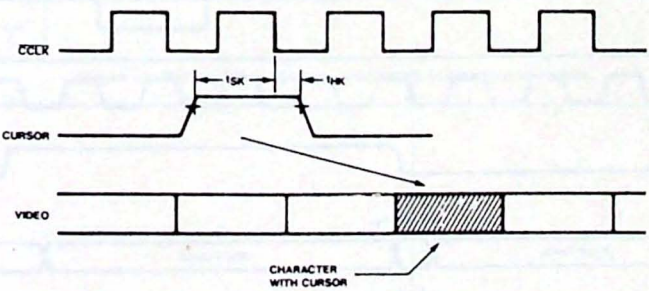

Figure 7. Cursor Pipeline Timing

Preliminary

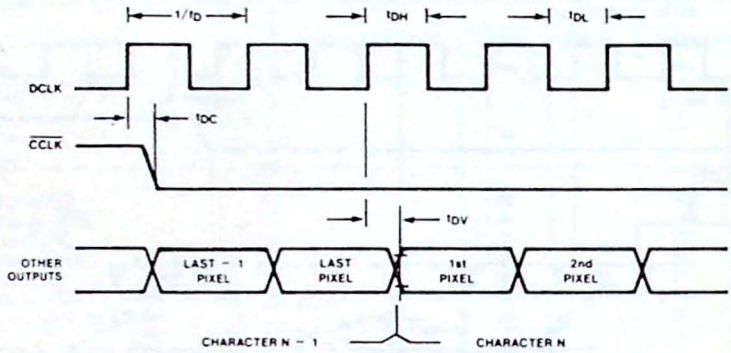

Figure 8. Output Pipeline Timing

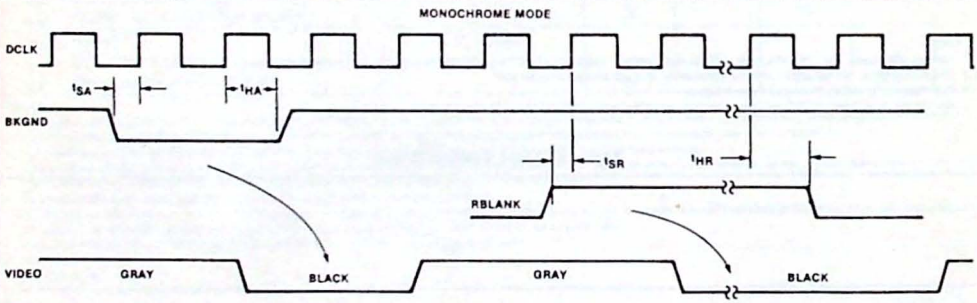

Figure 9. BKGND and RBLANK Timing During Inactive Scan Time (Blank = 1)

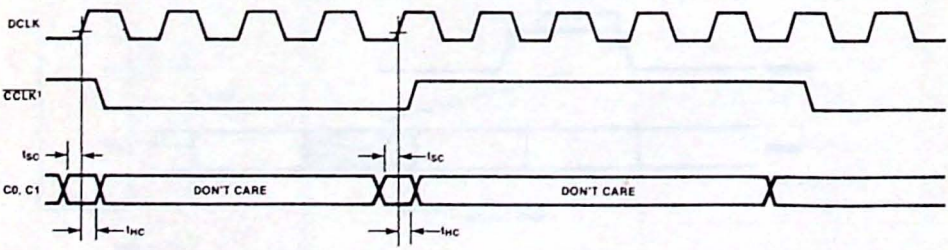

NOTE
1. The high and low times of CCLK may be controlled independently.

Figure 10. Clock Divider Timing

Preliminary

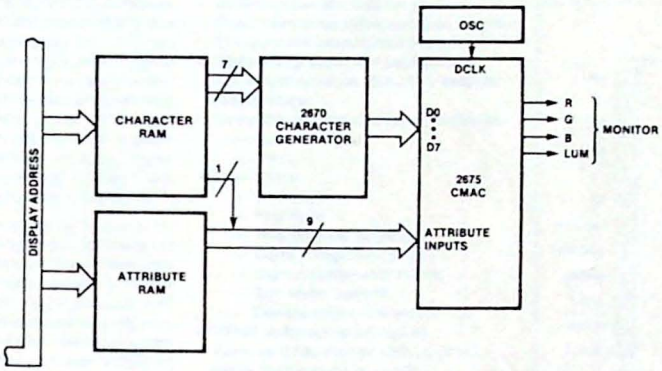

Figure 11. System Block Diagram of SCB2675 in Color Mode

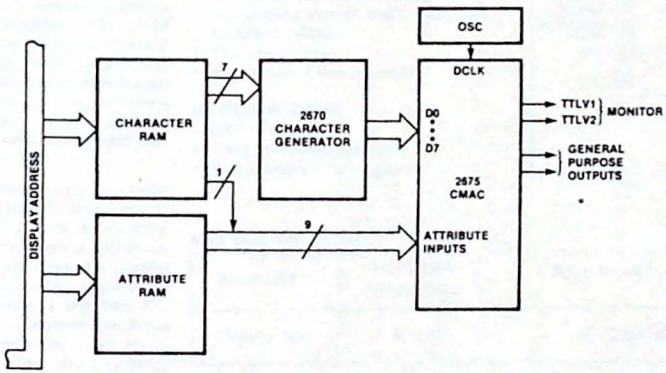

Figure 12. System Block Diagram of SCB2675 in Monochrome Mode

Preliminary

DESCRIPTION

The Signetics SCB2675T Color/Monochrome Attributes Controller (CMAC) is a bipolar LSI device designed for CRT terminals and display systems that employ raster scan techniques. It contains a programmable dot clock divider to generate a character clock, a high speed shift register to serialize input dot data into a video stream, latches and logic to apply visual attributes to the resulting display, and logic to display a cursor on the display.

The CMAC provides control of visual attributes on a character by character basis for two operating modes: monochrome and color. The monochrome mode provides reverse video, blank, highlight and two general purpose user definable attributes. In this mode, the display characters can be specified to appear on either a light or dark screen background. Retrace video suppression can be automatically or externally controlled. The color mode provides eight colors for foreground (character) video and eight colors for background video together with a luminance output for external color set selection or to simultaneously drive a monochrome monitor. Additionally, both modes provide double width, underline, blink, dot stretching and dot width attributes. In monochrome mode, the SCB2675 emulates the attribute characteristics of Digital Equipment Corporation's VT100 terminal.

The horizontal dot frequency is the basic timing input to the CMAC. This clock is divided internally to provide a character clock output for system synchronization. Up to ten bits of dot data are parallel loaded into the video shift register on each character boundary. The two TTL video data outputs in monochrome mode are encoded to provide four video intensities (black, gray, white and highlight). The video data in color mode is encoded to provide eight foreground colors and shifted out on three TTL outputs, together with the luminance output.

FEATURES

- 40 MHz video dot rate version
- Four video intensities encoded on two TTL outputs (monochrome mode)
- Eight foreground and background colors encoded on three TTL outputs (color mode)
- Internally latched character attributes:
  - — Reverse video
  - — Blank
  - — Blink
  - — Underline
  - — Highlight
  - — Two general purpose
  - — Eight foreground colors
  - — Eight background colors
  - — Dot width control
  - — Double width characters
- VT100 compatible attributes
- Reverse video cursor with optional white cursor in color mode
- Up to 10 dots per character
- Light or dark background in monochrome mode
  - — Automatic retrace blanking
- Programmable dot stretching
- Compatible with SCN2674 AVDC and SCN2670 DCGG
- TTL compatible
- 40-pin dual in-line package

APPLICATIONS

- CRT terminals
- Word processing systems
- Small business computers

PIN CONFIGURATION

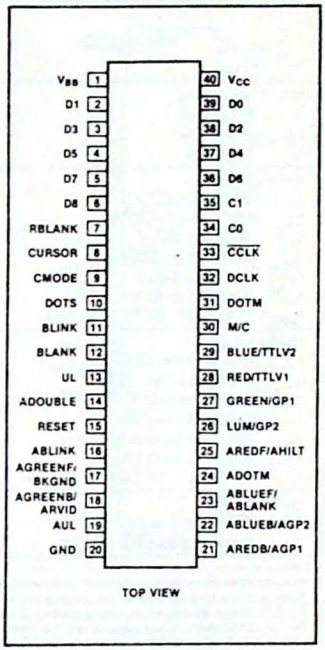

ORDERING CODE

PACKAGES	DOTS PER CHARACTER	V_{CC} = 5V ± 5%, 0°C to +70°C
Plastic DIP	7, 8, 9, 10	SCB2675TC4N40

Production quantities available in Q2 1985

Preliminary

AC ELECTRICAL CHARACTERISTICS $T_A = 0°C$ to $+70°C$, $V_{CC} = 5V \pm 5\%$,

PARAMETER		TEST CONDITIONS	TENTATIVE LIMITS		UNIT
			Min	Max	
Dot clock timing					
f_D	Frequency			40	MHz
t_{DH}	High time		10		ns
t_{DL}	Low time		10		ns
Setup times					
t_{SB}	BLANK to $\overline{CCLK}$		35		ns
t_{SA}	Attributes to $\overline{CCLK}$		40		ns
t_{SD}	D0-D9 to $\overline{CCLK}$		50		ns
t_{SK}	CURSOR to $\overline{CCLK}$		35		ns
t_{SC}	C0, C1 to DCLK		10		ns
t_{SR}	RBLANK to DCLK		10		ns
t_{SM}	BLINK, UL, DOTS to BLANK		10		ns
Hold times					
t_{HB}	BLANK from $\overline{CCLK}$		5		ns
t_{HA}	Attributes from $\overline{CCLK}$		5		ns
t_{HD}	D0-D8 from $\overline{CCLK}$		5		ns
t_{HK}	CURSOR from $\overline{CCLK}$		5		ns
t_{HC}	C0, C1 from DCLK		5		ns
t_{HR}	RBLANK from DCLK		10		ns
t_{HM}	BLINK, UL, DOTS from BLANK		5		ns
Delay times		$C_L = 50pF$			
t_{DC}	$\overline{CCLK}$ from DCLK			35	ns
t_{DV}	Other outputs from DCLK			35	ns

NOTES

1. Stresses above those listed under Absolute Maximum Ratings may cause permanent damage to the device. This is a stress rating only and functional operation of the device at these or at any conditions other than those described in the AC and DC Electrical Characteristics section of this specification is not implied.
2. For operating at elevated temperatures, the device must be derated based on +150°C maximum junction temperature.
3. This product includes circuitry specifically designed for the protection of its internal devices from damaging effects of excessive static charge. Nonetheless, it is suggested that conventional precautions be taken to avoid applying voltages greater than the rated maxima.
4. Parameters are valid over operating temperature range unless otherwise specified.
5. All voltage measurements are referenced to ground. For testing, all input signals swing between 0.4V and 2.4V with a transition time of 3ns maximum. All time measurements are referenced at input voltages of 0.8V and 2.0V and at output voltages of 0.8V and 2.0V as appropriate.
6. Typical values are at +25°C, typical supply voltages and typical processing parameters.

VIDEO ATTRIBUTES CONTROLLER (VAC) SCB2677

Preliminary

DESCRIPTION

The Signetics 2677A and 2677B Video Attributes Controllers (VAC) are bipolar LSI devices designed for CRT terminals and display systems that employ raster scan techniques. Each contains a high speed video shift register, field and character attributes logic, attribute latch, cursor format logic and half dot shift control.

The VAC provides control of visual attributes on a field or character by character. Internal logic preserves field attribute data from character row to character row so that an attribute byte is not required at the beginning of each row. The 2677B provides for reverse video, blank (non-display), blink, underline and highlight attributes and a graphics mode attribute to work in conjunction with the Signetics 2670 Display Character and Graphics Generator (DCGG). The 2677A substitutes a strike-thru attribute for the graphics attribute.

The horizontal dot frequency is the basic timing input to the VAC. Internally, this clock is divided down to provide a character clock output for system synchronization. Up to ten bits of video dot data are parallel loaded into the video shift register on each character boundary. The video data is encoded to three levels of intensity (black, gray and white) and output on two TTL outputs. Light or dark screen background may be specified.

FEATURES

- 25MHz video dot rate
- Three level encoded TTL video outputs
- Character/field attribute logic
  - Reverse video
  - Character blank
  - Character blink
  - Underline
  - Highlight
- Strike-thru or graphics control
- Field attributes extend from row to row
- Light or dark field
- Cursor reverse video logic
- Up to 10 dots per character
- Retrace blanking for light field
- Optional field graphics control output
- High speed bipolar design
- 40 pin dual in-line package
- TTL compatible
- Compatible with Signetics 2672 PVTC, 2674 AVDC and 2670 DCGG

APPLICATIONS

- CRT terminals
- Word processing systems
- Small business computers

PIN CONFIGURATION

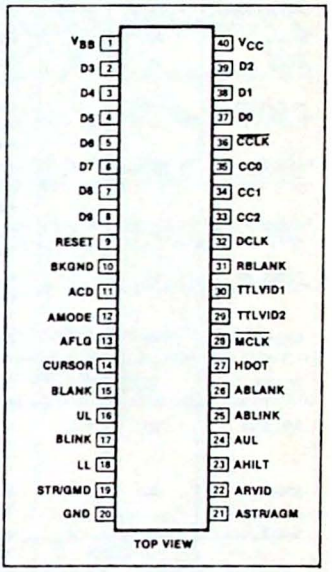

ORDERING CODE

PACKAGES	V_{CC} = 5V ±5%, T_A = 0°C to 70°C			
	GRAPHICS ATTRIBUTE		STRIKE-THRU ATTRIBUTE	
	25MHz	18MHz	25MHz	18MHz
Ceramic DIP	SCB2677BC5I40	SCB2677BC8I40	SCB2677AC5I40	SCB2677AC8I40
Plastic DIP	SCB2677BC5N40	SCB2677BC8N40	SCB2677AC5N40	SCB2677AC8N40

BLOCK DIAGRAM

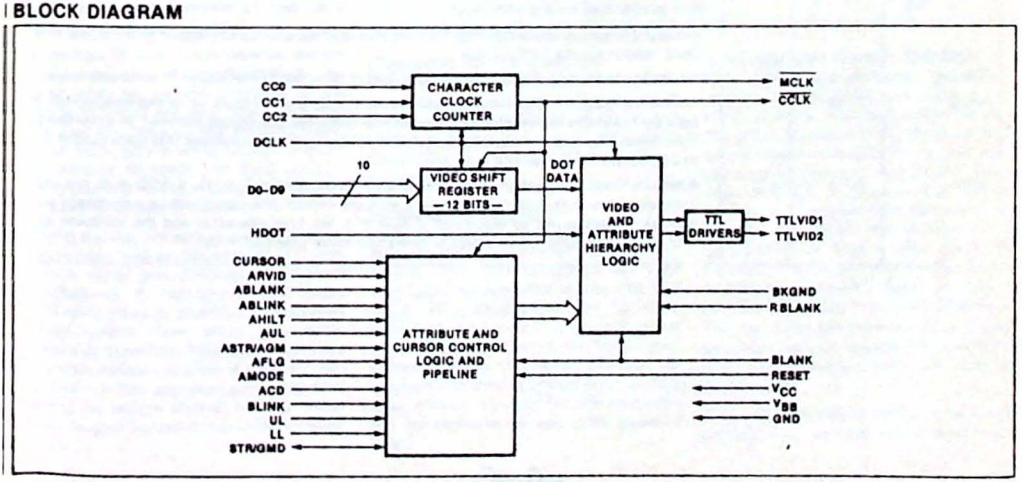

VIDEO ATTRIBUTES CONTROLLER (VAC) SCB2677

Preliminary

PIN DESIGNATION

MNEMONIC	PIN NO.	TYPE	NAME AND FUNCTION
DCLK	32	I	**Dot Clock:** Dot frequency input. Video output shift rate.
$\overline{CCLK}$	36	O	**Character Clock:** A submultiple of DCLK. The frequency ranges from one sixth to one twelfth of DCLK, as determined by the state of the CC0-CC2 inputs.
CC2-CC0	33-35	I	**Character Clock Control:** The logic state on these three static inputs determine the internal divide factor for the $\overline{CCLK}$ output rate. Character clock rates of 6 thru 12 dots per character may be specified.
D0-D9	37-39, 2-8	I	**Dot Data Input:** These are parallel inputs corresponding to the character/graphic symbol dot data for a given scan line. These inputs are strobed into the video shift register on the falling edge of each character clock.
HDOT	27	I	**Half Dot Shift:** When this input is high, the serial video output is delayed by one half dot time. This input is latched on the falling edge of each character clock.
CURSOR	14	I	**Cursor Timing:** This input provides the timing for the cursor video. When high, effectively reverses the intensities of the video and attributes. Cursor position, shape, and blink rate are controlled by this input.
BKGND	10	I	**Background Intensity:** Specifies light or dark video during BLANK and character fields. Affects the intensities of all attributes.
BLANK	15	I	**Screen Blank:** When high, this input forces the video outputs to the level specified by the BKGND input (either high or low intensity). Not effective when RBLANK is high.
RBLANK	31	I	**Retrace Blank:** This input is used to force the two video outputs to a low intensity (black) during retrace intervals. If held high (1), it will automatically suppress video when BLANK is high (1). The user may pulse this input while BLANK is high to selectively suppress raster video.
ARVID	22	I	**Reverse Video Attribute:** The intensity of the associated character or field video is reversed. All other attributes are effectively reversed.
AHILT	23	I	**Highlight Attribute:** All dot video (including underline) of the associated character or field is highlighted with respect to the BKGND input and the reverse video attribute.
ABLANK	26	I	**Blank Attribute:** Generates a blank space in the associated character or field. The blank space intensity is determined by the BKGND input, the reverse video attribute, and the CURSOR input.
ABLINK	25	I	**Blink Attribute:** The associated character or field video is driven to the intensity determined by BKGND and the reverse video attribute when the BLINK input is high.
AUL	24	I	**Underline Attribute:** Specifies a line to be displayed on the character or field. The line is specified by the UL input. All other attributes apply to the underline video.
ASTR/AGM	21	I	**Strike-Thru Attribute (2677A):** Specifies a line to be displayed on the character or field. The line is specified by the STR input.
		I	**Attribute Graphics Mode (2677B):** This input is latched and synchronized to provide a field GMD output for the 2670 DCGG.
AMODE	12	I	**Attribute Mode:** Specifies character (AMODE = 0) or field (AMODE = 1) attributes mode.
AFLG	13	I	**Attributes Flag:** The VAC samples and latches the attributes inputs when this input is high. If field attributes are specified (AMODE = 1), the attributes are double buffered on a row basis. Thus, each scan line of every character row will start with the attributes that were valid at the end of the previous row.
ACD	11	I	**Attribute Control Display:** In field attributes mode (AMODE = 1), if ACD = 0, the first character in each new attribute field (the attribute control character) will be suppressed and only the attributes will be displayed. If ACD = 1, the first character and the attributes are displayed. This input has no effect in character mode (AMODE = 0).

VIDEO ATTRIBUTES CONTROLLER (VAC) SCB2677

Preliminary

PIN DESIGNATION (continued)

MNEMONIC	PIN NO.	TYPE	NAME AND FUNCTION
BLINK	17	I	**Blink:** This input is sampled on the falling edge of BLANK to provide the blink rate for the character blink attribute. It should be a submultiple of the frame rate.
UL	16	I	**Underline:** Indicates the scan line(s) for the underline attribute. Latched on the falling edge of BLANK.
STR/GMD	19	I	**Strike-Thru Line (2677A):** Indicates the scan line(s) for the strike-thru attribute. Latched on the falling edge of BLANK.
		O	**Graphics Mode (2677B):** This output provides a synchronized, latched, field graphics mode corresponding to the AGM input. This output can be used to control the GM input on the 2670 DCGG.
LL	18	I	**Last Line:** Indicates the last scan line of each character row. Used internally to extend field attributes across row boundaries. Latched on the falling edge of BLANK. This input has no effect in character mode (AMODE = 0).
$\overline{MCLK}$	28	O	**Memory Clock:** This output is active for the last dot time for each $\overline{CCLK}$ period. See figure 1.
TTLVID1	30	O	**TTL Video 1:** This output corresponds to the serial, non-highlighted video dot pattern.
TTLVID2	29	O	**TTL Video 2:** This output corresponds to the highlighted serial video dot pattern. Should be used with TTLVID1 to decode a composite video of three intensities.
RESET	9	I	**Manual Reset:** This active high input initializes the internal logic and resets the attribute latches.
V_{CC}	40	I	**Power Supply:** +5 Volts.
V_{BB}	1	I	**Bias Supply:** See figure 13.
GND	20	I	**Ground:** 0V reference

FUNCTIONAL DESCRIPTION

The VAC consists of four major sections (see block diagram). The high speed dot clock input is divided internally to provide a character clock for system timing. The parallel dot data is loaded into the video shift register on each character boundary and shifted into the video logic block at the dot rate. The six attribute inputs are latched internally and combined with the serial dot data to provide a three level video source for the monitor.

A separate BLANK input defines the active screen area. When BLANK = 0, the video levels are derived internally by the combinations of dot data, attributes, cursor, and the state of the BKGND input. Either black, gray or white background can be selected. Symbols (dot data) are normally gray and can be highlighted to white or black as shown in figure 2.

During the inactive screen area (BLANK = 1), the video level produced by the TTL outputs is either gray (BKGND = 1) or black (BKGND = 0). A separate retrace blank (RBLANK) input is provided to suppress raster retrace video when gray background is specified. This input will force the video outputs to a low if RBLANK and BLANK = 1. The user may pulse RBLANK during the retrace interval in order to extend the gray border closer to the monitor edges.

CC2	CC1	CC0	$\overline{CCLK}$ DOTS/CHARACTER	$\overline{CCLK}$ DUTY CYCLE*
0	0	0	6	3/3
0	0	1	6	3/3
0	1	0	7	4/3
0	1	1	8	4/4
1	0	0	9	5/4
1	0	1	10	5/5
1	1	0	11	6/5
1	1	1	12	6/6

*Low/high

Character Clock Counter

The character clock counter divides the frequency on the DCLK input to generate the character clock ($\overline{CCLK}$). The divide factor is specified by the clock control inputs (CC0-CC2) as shown in the table above. See figure 1.

Video Shift Register

On each character boundary, the parallel data (D0-D9) is loaded into the video shift register. The data is shifted out least significant bit first (D0) by the DCLK. If 11 or 12 dots/character are specified (CC2-CC0 = 110 or 111), a 0 (blank dot) is always shifted out before D0. For 12 dots/character, a 0 is also shifted out after D9. The serial dot data is shifted into the video logic where it is combined with the cursor and attributes to encode three levels of video.

Attribute and Cursor Control

The VAC visual attributes capabilities include: reverse video, character blank, blink, underline, highlight, and strike-thru. The six attributes and the three attribute control inputs (AMODE, AFLG, and ACD) are clocked into the VAC on the falling edge of $\overline{CCLK}$. If AFLG is high, the attributes are latched internally and are effective for either one character time (AMODE = 0) or until another set of attributes is latched (AMODE = 1). The attributes set is double buffered on a row by row basis internally. Using this technique, field attributes can extend across character row boundaries thereby eliminating the necessity of starting each row with an attribute set.

When field attribute mode is selected, (AMODE = 1), the VAC will accommodate

VIDEO ATTRIBUTES CONTROLLER (VAC) SCB2677

Preliminary

two attribute storage configurations. In one configuration, the attribute control data is stored in the refresh RAM, taking the place of the first character code in the field to be affected. For this mode, the ACD input is tied low and blank characters will be displayed in the screen positions occupied by the attribute data (see figure 11). In the second configuration, (ACD = 1), the character codes and attribute data are presented to the VAC in parallel. In this mode, dot data is displayed at each character position (see figure 12).

The CURSOR and the attribute input signals are pipelined internally to allow for system propagations (one $\overline{CCLK}$ for refresh RAM, one $\overline{CCLK}$ for dot generator). The attribute timing signals BLINK, UL, STR and LL are clocked into the VAC at the beginning of each scan line by the falling edge of the BLANK input. Thus, these signals must be in their proper state at the falling edge of BLANK preceding the scan line at which they are to be active (see figure 5).

Video Logic

The serial dot data and the pipelined cursor and attributes are combined to generate three levels (white, gray, and black) on two TTL compatible outputs, TTLVID1 and TTLVID2. The three levels are encoded as shown above.

The video is normally shifted out on the leading edge of the DCLK. When the HDOT input is asserted, the corresponding dot data is delayed by one-half DCLK. This half dot shifting, when used on selected lines of character video, can be used to effect eye-pleasing character rounding as shown in figure 3.

Attribute Hierarchy

The video of each character block consists of four components as shown in figure 4.

Symbol video is generated from the dot data inputs D0-D9.

Underline video is enabled by the AUL attribute and is generated when the UL timing input is active. Underline and symbol video are always the same intensity.

Strike-thru video is enabled by the ASTR attribute and is generated when the STR timing input is active. This video is the same intensity as the symbol and underline video. This feature applies to the 2673A only.

Surround video is the absence of symbol, underline and strike-thru video or the presence of the non-display attributes (ABLANK or ABLINK • BLINK).

The relative intensities of the four video components are determined by the remaining attributes (AHILT, ABLANK, ABLINK, ARVID) and the BKGND and CURSOR inputs as illustrated in table 1.

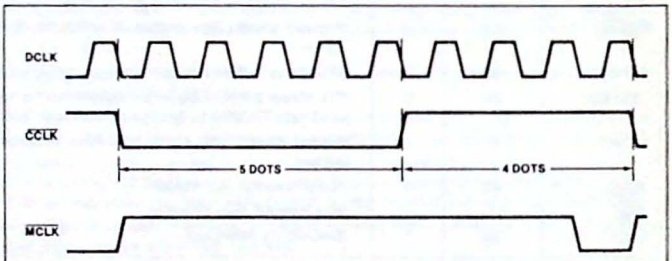

Figure 1. Clock Waveform (9 Dots/Character)

TTLVID2	TTLVID1	INTENSITY
0	0	Black
0	1	Gray
1	0	Not used
1	1	White

NOTE
The TTLVID1 output can be used independently to generate a two level non-highlighted video.

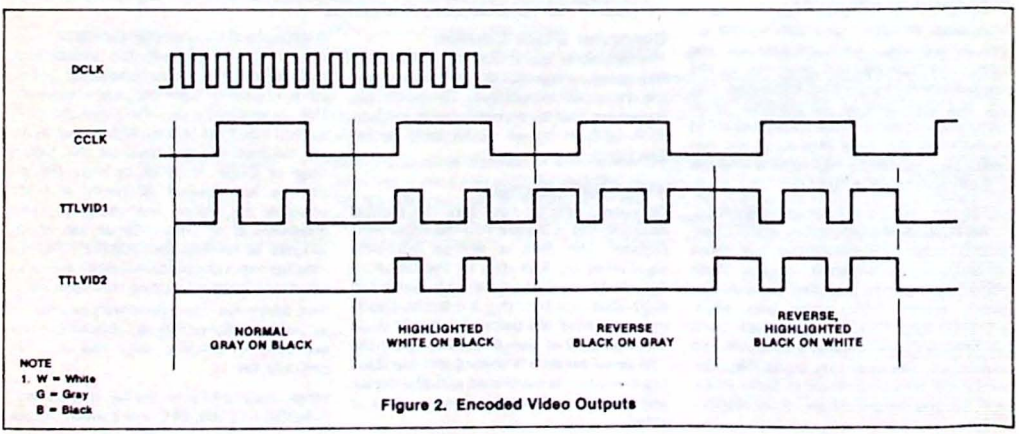

Figure 2. Encoded Video Outputs

VIDEO ATTRIBUTES CONTROLLER (VAC) SCB2677

Preliminary

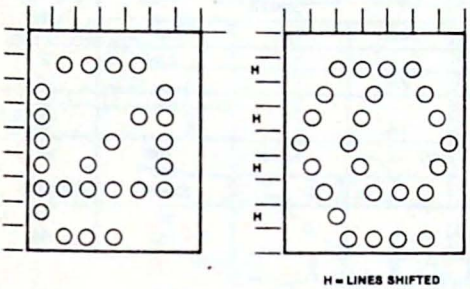

Figure 3. "AT" Symbol with and without Half Dot Shifting

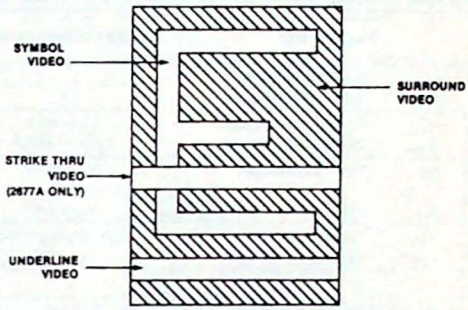

Figure 4. Video Components of Character Block

TABLE 1 Attributes Hierarchy

BLANK	CBLANK	BKGND	REVERSE[1]	AHILT	NON DISPLAY[2]	SYMBOL, UNDERLINE OR STRIKE-THRU[3,4]	SURROUND VIDEO[3]
0	d	0	0	0	0	G	B
0	d	0	0	0	1	B	B
0	d	0	0	1	0	W	B
0	d	0	0	1	1	B	B
0	d	0	1	0	0	B	G
0	d	0	1	0	1	G	G
0	d	0	1	1	0	B	W
0	d	0	1	1	1	W	W
0	d	1	0	0	0	B	G
0	d	1	0	0	1	G	G
0	d	1	0	1	0	B	W
0	d	1	0	1	1	W	W
0	d	1	1	0	0	G	B
0	d	1	1	0	1	B	B
0	d	1	1	1	0	W	B
0	d	1	1	1	1	B	B
1	0	0	d	d	d	B	B
1	0	1	d	d	d	G	G
1	1	d	d	d	d	B	B

B = Black
G = Gray
W = White
d = Don't care

NOTES:
1. REVERSE = ARVID ⊕ CURSOR
2. Non-display = ABLINK + BLINK + ABLANK
3. See figure 4.
4. Symbol, underline and strike-thru are always same intensity.

ABSOLUTE MAXIMUM RATINGS[1]

PARAMETER	RATING	UNIT
Operating ambient temperature[2]	0 to +70	°C
Storage temperature	−65 to +150	°C
All voltages with respect to ground	−0.5 to +6.0	V

NOTES
1. Stresses above those listed under Absolute Maximum Ratings may cause permanent damage to the device. This is a stress rating only and functional operation of the device at these or at any other condition above those indicated in the operation section of this specification is not implied.
2. For operating at elevated temperatures, the device must be derated based on +150°C maximum junction temperature.

VIDEO ATTRIBUTES CONTROLLER (VAC) SCB2677

Preliminary

DC ELECTRICAL CHARACTERISTICS $T_A = 0°C$ to $+70°C$, $V_{CC} = 5V \pm 5\%$, V_{BB} = See figure 13[3,4,5,6]

PARAMETER		TEST CONDITIONS	LIMITS			UNIT
			Min	Typ	Max	
V_{IL}	Input low voltage				0.8	V
V_{IH}	Input high voltage		2.0			V
V_{OL}	Output low voltage	$I_{OL} = 4mA$			0.4	V
V_{OH}	Output high voltage	$I_{OH} = -400\mu A$	2.4			V
I_{IL}	Input low current	$V_{IN} = 0.4V$			−400/ −800[10]	μA
I_{IH}	Input high current	$V_{IN} = 2.4V$			20/40[10]	μA
I_{CC}	V_{CC} supply current	$V_{IN} = 0V$, V_{CC} = max			80	mA
I_{BB}	V_{BB} supply current	V_{BB} = max			120	mA

AC ELECTRICAL CHARACTERISTICS $T_A = 0°C$ to $+70°C$, $V_{CC} = 5V \pm 5\%$, V_{BB} = See figure 13[3,4,5,6]

PARAMETER		TEST CONDITIONS	LIMITS				UNIT
			25MHz VERSION		18MHz VERSION		
			Min	Max	Min	Max	
Dot clock[6]							
f_D	frequency			25		18	MHz
t_{DH}	high		15		22		ns
t_{DL}	low		15		22		ns
Setup times to $\overline{CCLK}$[7]							
t_{BS}	BLANK		50		50		ns
t_{SC}	BLINK, UL, STR, LL (ref to BLANK)		20		20		ns
t_{SA}	Attributes		45		55		ns
t_{SD}	Dot data D0-D9		70		70		ns
t_{SK}	CURSOR		50		50		ns
t_{FS}	AFLG		50		65		ns
t_{SH}	HDOT		45		55		ns
Hold times from $\overline{CCLK}$[7]							
t_{HC}	BLINK, UL, STR, LL (ref to BLANK)		20		20		ns
t_{HA}	Attributes		20		20		ns
t_{HD}	Dot data D0-D9		30		30		ns
t_{HK}	CURSOR		20		20		ns
t_{FH}	AFLG		30		30		ns
t_{HH}	HDOT		20		20		ns
Setup times to DCLK[8]							
t_{SG}	BKGND		15		15		ns
t_{SB}	RBLANK		15		15		ns
Hold times from DCLK[8]							
t_{HG}	BKGND		15		15		ns
t_{HB}	RBLANK		15		15		ns
Delay times[9]		$C_L = 150pF$					
t_{DGM}	GMD from DCLK			65		65	ns
t_{DC}	MCLK, $\overline{CCLK}$ from DCLK			65		65	ns
t_{DV}[11]	TTLVID1 and TTLVID2 from DCLK		45	75	45	80	ns

NOTES

3. Parameters are valid over operating temperature range unless otherwise specified.
4. All voltage measurements are referenced to ground (V_{SS}). All input signals swing between 0.4V and 2.4V. All time measurements are referenced at input voltages of 0.8V, 2.0V and at output voltages of 0.8V, 2.0V as appropriate.
5. Typical values are at +25°C, typical supply voltages and typical processing parameters.
6. See figure 10.
7. See figures 5, 6, 7 and 10.
8. See figure 9.
9. See figures 7 and 8.
10. For DCLK input.

VIDEO ATTRIBUTES CONTROLLER (VAC) SCB2677

Preliminary

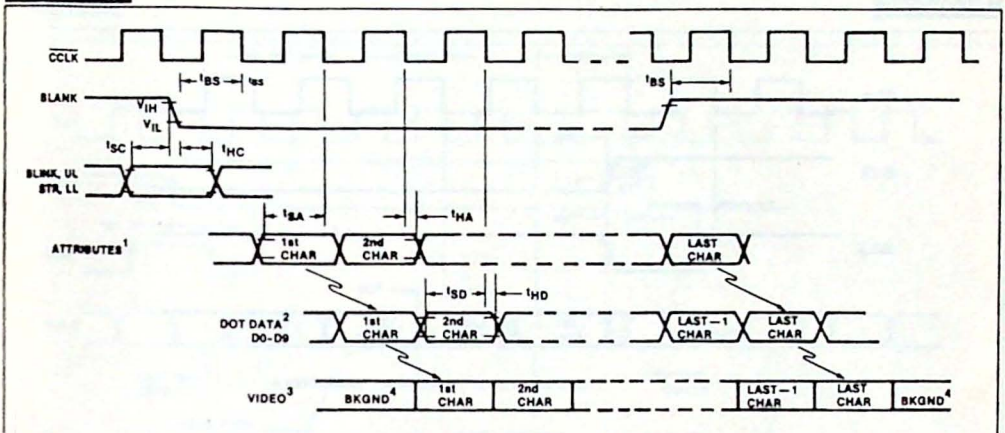

NOTES:
1. Attributes include: ABLINK, ABLANK, ARVID, AUL, AHLT, and ASTR.
2. One $\overline{CCLK}$ delay for dot data (obtained from delay through character generator).
3. See figure 8 for detail timing of TTLVID1, TTLVID2.
4. Non-active scan time. VIDEO reverts to polarity selected by the BKGND input.

Figure 5. VAC Pipeline Timing

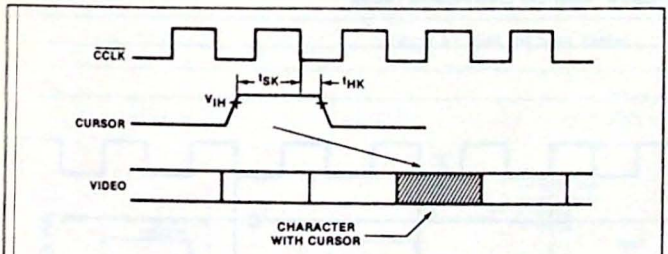

Figure 6. Cursor Pipeline Timing

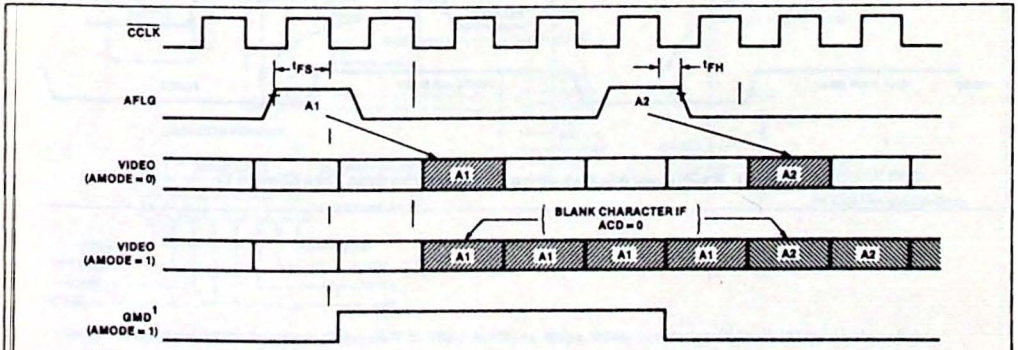

NOTE:
1. GMD output in 2677B version only. See figure 8 for detail timing.

Figure 7. Character (AMODE = 0), Field (AMODE = 1), and GMD Attribute Timing

Preliminary

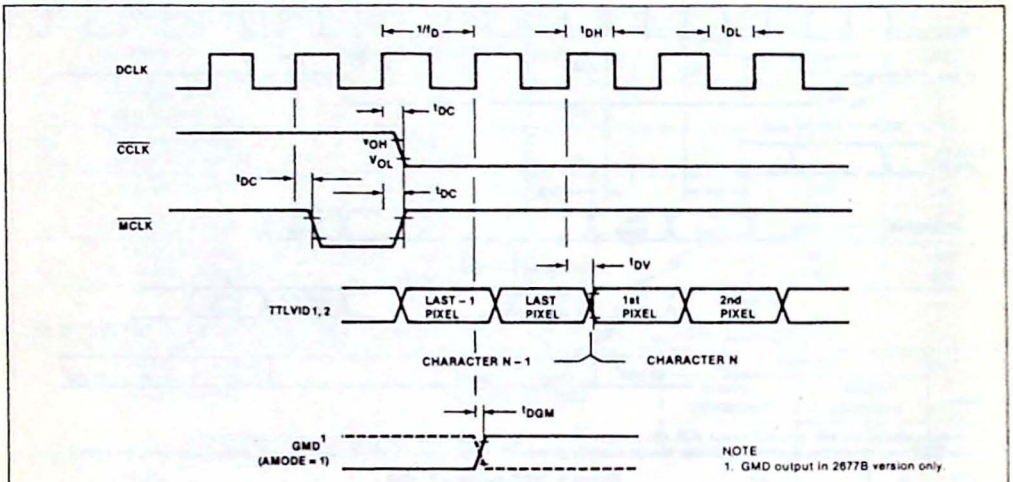

Figure 8. Video and GMD Pipeline Timing

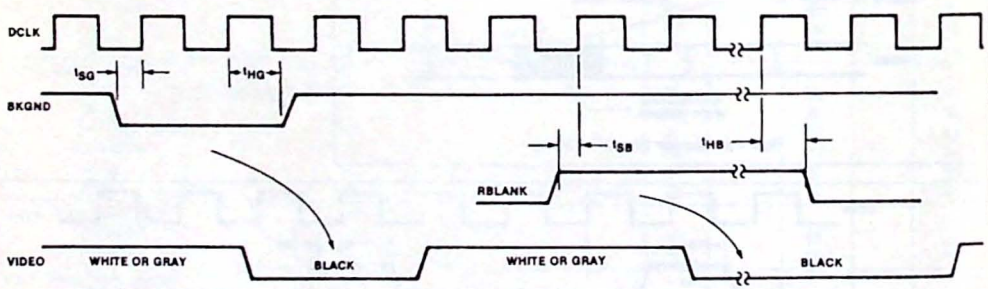

Figure 9. BKGND and RBLANK timing During Inactive Scan Time (Blank = 1)

PPreliminary

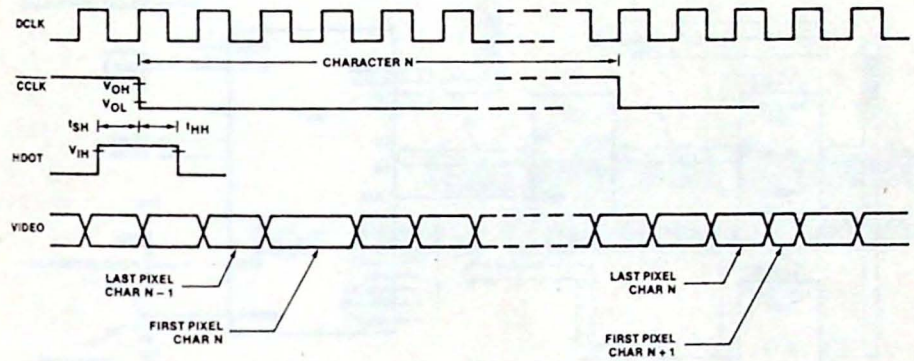

Figure 10. Half Dot Shift Timing

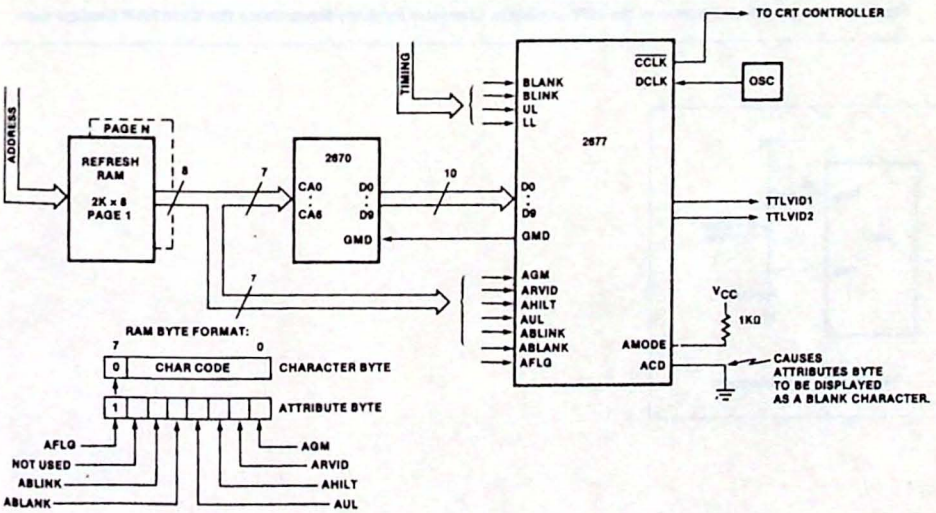

Figure 11. System Block Diagram of the 2677 in Field Attribute Mode Using the Narrow RAM (8 Wide) Configuration

Preliminary

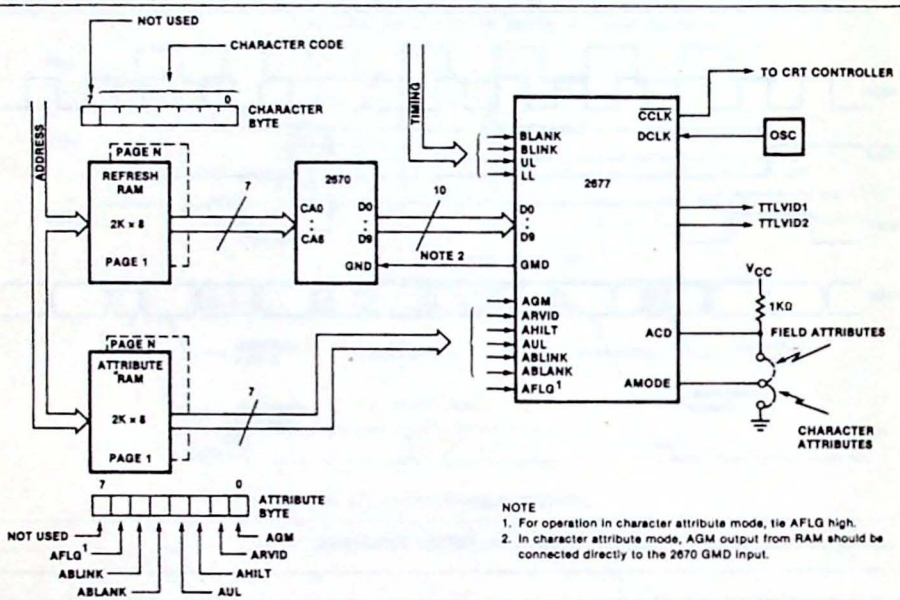

Figure 12. System Block Diagram of the 2677 in Field or Character Attribute Mode Using the Wide RAM Configuration

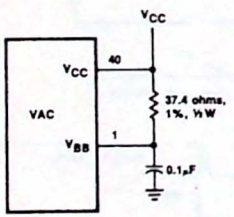

Figure 13. Test Diagram

Peripheral Circuits for Data Communication

VALVO

ASYNCHRONOUS COMMUNICATIONS INTERFACE SCN2641

DESCRIPTION

The Signetics 2641 is a universal asynchronous data communications controller chip that interfaces directly to most 8-bit microprocessors and may be used in a polled or interrupt-driven system environment. The 2641 accepts programmed instructions from the microprocessor while supporting asynchronous serial data communications in full- or half-duplex mode.

The 2641 serializes parallel data characters received from the microprocessor for transmission. Simultaneously, it can receive serial data and convert it into parallel data characters for input to the microcomputer.

The 2641 contains a baud rate generator which can be programmed to either accept an external clock or to generate internal transmit or receive clocks. Sixteen different baud rates can be selected under program control when operating in the internal clock mode.

The 2641 is constructed using Signetics n-channel silicon gate depletion load technology and is packaged in a 24-pin DIP.

FEATURES

- 5- to 8-bit characters plus parity
- 1, 1½ or 2 stop bits transmitted
- Odd, even or no parity
- Parity, overrun and framing error detection
- Line break detection and generation
- False start bit detection
- Automatic serial echo mode (echoplex)
- Local or remote maintenance loop-back mode
- Baud rate:
  - DC to 1M bps (1X clock)
  - DC to 62.5K bps (16X clock)
  - DC to 15.625K bps (64X clock)
- Internal or external baud rate clock
- 16 internal rates
- Double-buffered transmitter and receiver
- Single +5V power supply

APPLICATIONS

- Intelligent terminals
- Network processors
- Front end processors
- Remote data concentrators
- Serial peripherals

BLOCK DIAGRAM

The 2641 consists of five major sections. These are the transmitter, receiver, timing, operation control and modem control. These sections communicate with each other via an internal data bus and an internal control bus. The internal data bus interfaces to the microprocessor data bus via a data bus buffer.

Operation Control

This functional block stores configuration and operation commands from the CPU and generates appropriate signals to various internal sections to control the overall device operation. It contains read and write circuits to permit communications with the microprocessor via the data bus and contains mode registers 1 and 2, the command register, and the status register. Details of register addressing are presented in the 2641 programming section of this data sheet.

Timing

The 2641 contains a baud rate generator (BRG) which is programmable to accept external transmit or receive clocks or to divide an external clock to perform data communications. The unit can generate 16 commonly used baud rates, any one of which can be selected for full-duplex operation. See Table 1.

Receiver

The receiver accepts serial data on the RxD pin, converts this serial input to parallel format, checks for certain errors and sends an "assembled" character to the CPU.

Transmitter

The transmitter accepts parallel data from the CPU, appends start and stop bits, and, optionally, a parity bit, and outputs a composite serial stream of data on the TxD output pin.

Modem Control

The modem control section provides interfacing for two input signals and one output signal used for "handshaking" and status indication between the CPU and a modem.

PIN CONFIGURATION

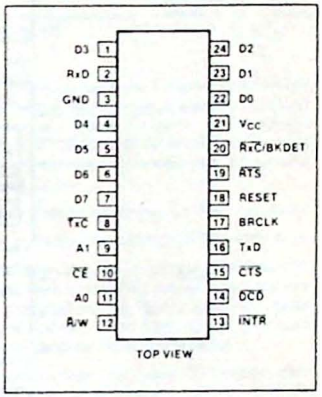

INTERFACE SIGNALS

The 2641 interface signals can be grouped into two types: the CPU-related signals (shown in Table 2), which interface the 2641 to the microprocessor system and the device-related signals (shown in Table 3), which are used to interface to the communications device or system.

ORDERING CODE

PACKAGES	COMMERCIAL RANGES V_{CC} = 5V ± 5%, T_A = 0°C to 70°C
Plastic DIP	SCN2641CC1N24

BLOCK DIAGRAM

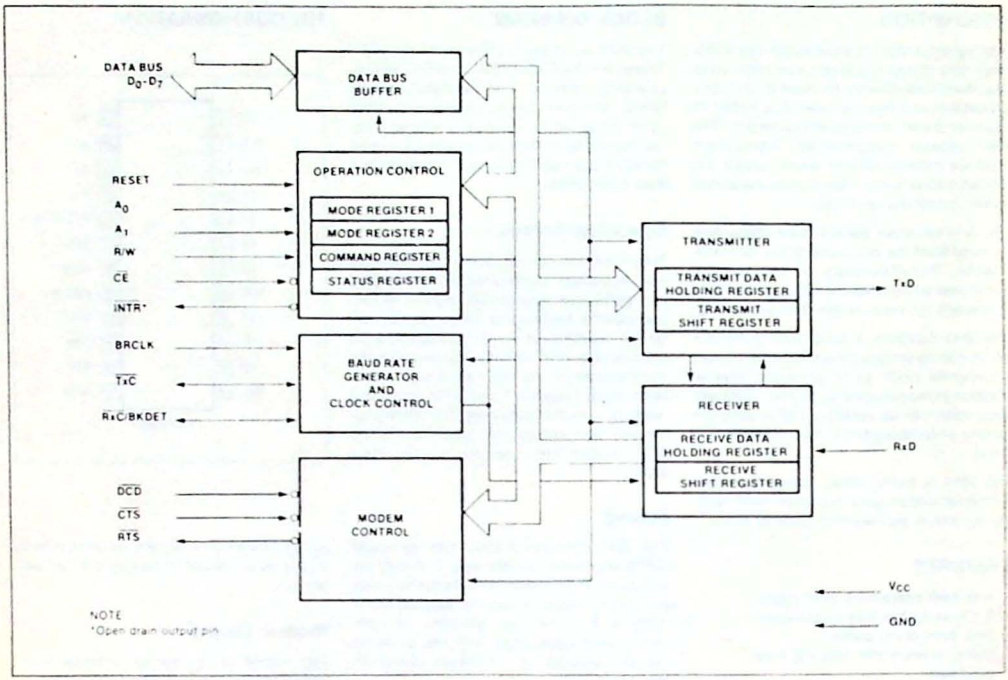

OPERATION

The functional operation of the 2641 is programmed by a set of control words supplied by the CPU. These control words specify items such as baud rate, number of bits per character, etc. The programming procedure is described in the 2641 programming section of this data sheet.

After programming, the 2641 is ready to perform the desired communications functions. The receiver performs serial to parallel conversion of data received from a modem or equivalent device. The transmitter converts parallel data received from the CPU to a serial bit stream. These actions are accomplished within the framework specified by the control words.

Receiver

The 2641 is conditioned to receive data when the $\overline{DCD}$ input is low and the RxEN bit in the command register is true. The receiver looks for a high-to-low transition of the start bit on the RxD input line. If a transition is detected, the state of the RxD line is sampled again after a delay of one-half of a bit time. If RxD is now high, the search for a valid start bit is begun again. If RxD is still low, a valid start bit is assumed and the receiver continues to sample the input line at one bit time intervals until the proper number of data bits, the parity bit, and one stop bit have been assembled. The data are then transferred to the receive data holding register, the RxRDY bit in the status register is

Table 1. BAUD RATE GENERATOR CHARACTERISTICS (BRCLK = 3.6864MHz)

MR23-20	BAUD RATE	ACTUAL FREQUENCY 16X CLOCK	PERCENT ERROR	DIVISOR
0000	50	0.8kHz	—	4608
0001	75	1.2	—	3072
0010	110	1.7596	– 0.022	2095
0011	134.5	2.152	—	1713
0100	150	2.4	—	1536
0101	300	4.8	—	768
0110	600	9.6	—	384
0111	1200	19.2	—	192
1000	1800	28.8	—	128
1001	2000	32.055	0.174	115
1010	2400	38.4	—	96
1011	3600	57.6	—	64
1100	4800	76.8	—	48
1101	7200	115.2	—	32
1110	9600	153.6	—	24
1111	19200	307.2	—	12

selet, and the $\overline{INTR}$ output is asserted. If the chcharacter length is less than 8 bits, the hihigh-order unused bits in the holding registeier are set to zero. The parity error, framing ererror, and overrun error status bits are ststrobed into the status register on the ppositive-going edge of $\overline{RxC}$ corresponding tcto the received character boundary. If the slstop bit is present, the receiver will immediatately begin its search for the next start bit. IfIf the stop bit is absent (framing error), the rereceiver will interpret a space as a start bit ifif it persists into the next bit time interval. If aa break condition is detected (RxD is low ffor the entire character as well as the stop bbit), only one character consisting of all zzeros (with the FE status bit set) will be ttransferred to the holding register. The RxD iinput must return to a high condition beffore a search for the next start bit begins.

Pin 20 can be programmed to be a break detect output by appropriate setting of MR27-MR24. If so, a detected break will cause that pin to go high. When RxD returns to mark for one RxC time, pin 20 will go low. Refer to the break detection timing diagram.

Transmitter

The 2641 is conditioned to transmit data when the $\overline{CTS}$ input is low and the TxEN command register bit is set. The 2641 indicates to the CPU that it can accept a character for transmission by setting the TxRDY status bit and asserting the $\overline{INTR}$ output. When the CPU writes a character into the transmit data holding register, these conditions are negated. Data are transferred from the holding register to the transmit shift register when it is idle or has completed transmission of the previous character. The TxRDY conditions are then asserted again. Thus, one full character time of buffering is provided.

The transmitter automatically sends a start bit followed by the programmed number of data bits, the least significant bit being sent first. It then appends an optional odd or even parity bit and the programmed number of stop bits. If, following transmission of the data bits, a new character is not available in the transmit holding register, the TxD output remains in the marking (high) condition and the TxEMT/DSCHG status bit and the $\overline{INTR}$ output are asserted. Transmission resumes when the CPU loads a new character into the holding register. The transmitter can be forced to output a continuous low (BREAK) condition by setting the send break command bit (CR3) high.

Table 2. CPU-RELATED SIGNALS

PIN NAME	PIN NO.	INPUT/ OUTPUT	FUNCTION
V_{CC}	21	I	+5V supply input
GND	3	I	Ground
RESET	18	I	A high on this input performs a master reset on the 2641. This signal asynchronously terminates any device activity and clears the mode, command and status registers. The device assumes the idle state and remains there until initialized with appropriate control words.
A_1-A_0	9, 11	I	Address lines used to select internal 2641 registers.
$\overline{R}$/W	12	I	Read command when low, write command when high.
$\overline{CE}$	10	I	Chip enable command. When low, indicates that control and data lines to the 2641 are valid and that the operation specified by the $\overline{R}$/W, A_1 and A_0 inputs should be performed. When high, places the D_0-D_7 lines in the three-state condition.
D_7-D_0	7, 6, 5, 4, 1, 24, 23, 22	I/O	8-bit, three-state data bus used to transfer commands, data and status between the 2641 and the CPU. D_0 is the least significant bit; D_7 the most significant bit.
$\overline{INTR}$	13	O	Interrupt request output (open drain). This output is asserted (low) upon the following conditions. 1. When the transmitter holding register (THR) is ready to accept a data character from the CPU. This corresponds to assertion of status bit SR0. If this is the only condition asserting the output, the output will be negated (high) when the THR is loaded by the CPU, or if the transmitter is disabled via command register bit CR0. 2. When the receiver holding register (RHR) has a character ready to be read by the CPU. This corresponds to assertion of status bit SR1. If this is the only condition asserting the output, the output will be negated (high) when the RHR is read by the CPU, or if the receiver is disabled via command register bit CR2. 3. When the transmitter has completed serialization of the last character loaded by the CPU. This corresponds to assertion of status bit SR2. If this is the only condition asserting the output, the output will be negated (high) when the THR is loaded by the CPU. 4. When a change of state has occurred at the $\overline{DCD}$ input while either the receiver or the transmitter are enabled. This corresponds to assertion of status bit SR2. If this is the only condition asserting the output, the output will be negated (high) when the status register is read by the CPU.

2641 PROGRAMMING

Prior to initiating data communications, the 2641 operational mode must be programmed by performing write operations to the mode and command registers. The 2641 can be reconfigured at any time during program execution. A flowchart of the initialization process appears in Figure 1.

Table 3. DEVICE-RELATED SIGNALS

PIN NAME	PIN NO.	INPUT/ OUTPUT	FUNCTION
BRCLK	17	I	Clock input to the internal baud rate generator (see Table 1). Not required if external receiver and transmitter clocks are used.
$\overline{RxC}$/BKDET	20	I/O	Receiver clock. If external receiver clock is programmed, this input controls the rate at which the character is to be received. Its frequency is 1X, 16X or 64X the baud rate, as programmed by mode register 1. Data are sampled on the rising edge of the clock. If internal receiver clock is programmed, this pin can be a 1X/16X clock or a break detect output pin.
RxD	2	I	Serial data input to the receiver. "Mark" is high, "space" is low.
$\overline{TxC}$	8	I/O	Transmitter clock. If external transmitter clock is programmed, this input controls the rate at which the character is transmitted. Its frequency is 1X, 16X or 64X the baud rate, as programmed by mode register 1. The transmitted data changes on the falling edge of the clock. If internal transmitter clock is programmed, this pin can be a 1X/16X clock output.
TxD	16	O	Serial data output from the transmitter. "Mark" is high, "space" is low. Held in mark condition when the transmitter is disabled.
$\overline{DCD}$	14	I	Data carrier detect input. Must be low in order for the receiver to operate. Its complement appears as status register bit SR6. Causes a low output on $\overline{INTR}$ when its state changes if CR2 or CR0 = 1. If DCD goes high while receiving, the RxC is internally inhibited. Operation of the receiver resumes on the second $\overline{RxC}$ rising edge following assertion of DCD.
$\overline{CTS}$	15	I	Clear to send input. Must be low in order for the transmitter to operate. If it goes high during transmission, the character in the transmit shift register will be transmitted before termination.
$\overline{RTS}$	19	O	General-purpose output which is the complement of command register bit CR5. Normally used to indicate request to send. If the transmit shift register is not empty when CR5 is reset (1 to 0), then $\overline{RTS}$ will go high one TxC time after the last serial bit is transmitted.

The internal registers of the 2641 are accessed by applying specific signals to the $\overline{CE}$, $\overline{R}$/W, A_1 and A_0 inputs. The conditions necessary to address each register are shown in Table 4.

Reading or loading the mode registers is done as follows: the first write (or read) operation addresses mode register 1 and a subsequent operation addresses mode register 2. If more than the required number of accesses are made, the internal sequencer recycles to point at the first register. The pointer is reset to mode register 1 by a RESET input or by performing a read command register operation, but is unaffected by any other read or write operation.

The 2641 register formats are summarized in Tables 5, 6, 7 and 8. Mode registers 1 and 2 define the general operational characteristics of the 2641, while the command register controls the operation within this basic framework. The 2641 indicates its status in the status register. These registers are cleared when a RESET input is applied.

2641 INITIALIZATION FLOWCHART

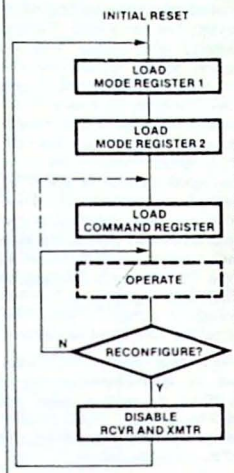

Figure 1

Mode Register 1 (MR1)

Table 5 illustrates Mode Register 1. Bits MR11 and MR10 select the baud rate multiplier. 1X, 16X and 64X multipliers are programmable if the external clock input option is selected by MR24 or MR25.

MR13 and MR12 select a character length of 5, 6, 7 or 8 bits. The character length does not include the parity bit, if programmed, and does not include the start and stop bits.

MR14 controls parity generation. If enabled, a parity bit is added to the transmitted character and the receiver performs a parity check on incoming data. MR15 selects odd or even parity when parity is enabled by MR14.

MR17 and MR16 select character framing of 1, 1.5 or 2 stop bits. (If 1X baud rate is programmed, 1.5 stop bits default to 1 stop bit on transmit.)

The bits in the mode register affecting character assembly and disassembly (MR12–MR16) can be changed dynamically (during active receive/transmit operation). The character mode register affects both the transmitter and receiver; therefore, character changes should be made when RxEN and TxEN = 0 or when TxEN = 1 and the transmitter is marking in half-duplex mode (RxEN = 0).

Table 4 2641 REGISTER ADDRESSING

$\overline{CE}$	A_1	A_0	R/W	FUNCTION
1	X	X	X	Three-state data bus
0	0	0	0	Read receive holding register
0	0	0	1	Write transmit holding register
0	0	1	0	Read status register
0	0	1	1	Invalid
0	1	0	0	Read mode registers 1,2
0	1	0	1	Write mode registers 1,2
0	1	1	0	Read command register
0	1	1	1	Write command register

NOTE
1. See AC characteristics section for timing requirements

Table 5 MODE REGISTER 1 (MR 1)

MR17 MR16	MR15	MR14	MR13 MR12	MR11 MR10
Stop Bit Length	Parity Type	Parity Control	Character Length	Mode and Baud Rate Factor
00 = Invalid 01 = 1 stop bit 10 = 1½ stop bits 11 = 2 stop bits	0 = Odd 1 = Even	0 = Disabled 1 = Enabled	00 = 5 bits 01 = 6 bits 10 = 7 bits 11 = 8 bits	00 = Invalid 01 = 1X rate 10 = 16X rate 11 = 64X rate

NOTE
1. Baud rate factor applies only if external clock is selected. Factor is 16X if internal clock is selected

Table 6 MODE REGISTER 2 (MR2)

MR27–MR24									MR23–MR20
	TxC	RxC	Pin 8	Pin 20		TxC	RxC	Pin 8	Pin 20	Baud Rate Selection
0000	E	E	TxC	RxC	1000	E	E	NF	RxC/TxC	
0001	E	I	TxC	1X	1001	E	I	TxC	BKDET	
0010	I	E	1X	RxC	1010	I	E	NF	RxC	
0011	I	I	1X	1X	1011	I	I	1X	BKDET	See baud rates in table 1
0100	E	E	TxC	RxC	1100	E	E	NF	RxC/TxC	
0101	E	I	TxC	16X	1101	E	I	TxC	BKDET	
0110	I	E	16X	RxC	1110	I	E	NF	RxC	
0111	I	I	16X	16X	1111	I	I	16X	BKDET	

NOTES
E = External clock
I = Internal clock (BRG)
NF = No function; output not valid
1X and 16X are clock outputs

Table 7 COMMAND REGISTER (CR)

CR7 CR6	CR5	CR4	CR3	CR2	CR1	CR0
Operating Mode	Request To Send	Reset Error	Force Break	Receive Control (RxEN)		Transmit Control (TxEN)
00 = Normal operation 01 = Automatic echo mode 10 = Local loop back 11 = Remote loop back	0 = Force $\overline{RTS}$ output high after TxSR serialization 1 = Force $\overline{RTS}$ output low	0 = Normal 1 = Reset error flags in status register (FE, OE, PE)	0 = Normal 1 = Force break	0 = Disable 1 = Enable	Not used. Must be programmed to '1'.	0 = Disable 1 = Enable

Table 8 STATUS REGISTER (SR)

SR7	SR6	SR5	SR4	SR3	SR2	SR1	SR0
	Data Carrier Detect	Framing Error	Overrun Error	Parity Error	TxEMT/DSCHG	RxRDY	TxRDY
Not used	0 = $\overline{DCD}$ input is high 1 = $\overline{DCD}$ input is low	0 = Normal 1 = Framing Error	0 = Normal 1 = Overrun Error	0 = Normal 1 = Parity error	0 = Normal 1 = Change in $\overline{DCD}$ or transmit shift register is empty	0 = Receive holding register empty 1 = Receive holding register has data	0 = Transmit holding register busy 1 = Transmit holding register empty

To effect assembly/disassembly of the next received/transmitted character, MR12-MR15 must be changed within n-bit times of the assertion of RxRDY/TxRDY. (n = smaller of the new and old character lengths.)

Mode Register 2 (MR2)

Table 6 illustrates Mode Register 2. MR23, MR22, MR21 and MR20 control the frequency of the internal baud rate generator (BRG). Sixteen rates are selectable as per Table 1. MR23-MR20 are don't cares if external clocks are selected (MR25-MR24 = 0). The individual rates are given in Table 1.

MR24-MR27 select the receive and transmit clock source (either the BRG or an external input) and the function at pins 8 and 20. Refer to Table 6.

Command Register (CR)

Table 7 illustrates the command register. Bits CR0 (TxEN) and CR2 (RxEN) enable or disable the transmitter and receiver respectively. Disabling the receiver causes the status bit to go low. If the transmitter is disabled, it will complete the transmission of the character in the transmit shift register (if any) prior to terminating operation. The TxD output will then remain in the marking state (high), while the TxRDY and TxEMT status bits go low. If the receiver is disabled, it will terminate operation immediately. Any character being assembled will be negated. A 0-to-1 transition of CR2 will initiate start bit search on the second $\overline{RxC}$ rising edge following the transition.

Bit CR5 (RTS) controls the RTS output. Data at the output are the logical complement of the register data.

Setting CR3 will force and hold the TxD output low (spacing condition) at the end of the current transmitted character. Normal operation resumes when CR3 is cleared. The user should wait at least one bit time after terminating the break before loading the THR with the next character to be transmitted.

Setting CR4 causes the error flags in the status register (SR3, SR4 and SR5) to be cleared. This is a one-time command. There is no internal latch for this bit.

When CR5 (RTS) is set, the RTS pin is forced low. A 1-to-0 transition of CR5 will cause $\overline{RTS}$ to go high (inactive) one TxC time after the last serial bit has been transmitted (if the transmit shift register was not empty).

The 2641 can operate in one of four submodes. The operational submode is determined by CR7 and CR6. CR7-CR6 = 00 is the normal mode, with the transmitter and receiver operating independently in accordance with the mode and status register instructions.

CR7-CR6 = 01 places the 2641 in the automatic echo mode. Clocked, regenerated received data are automatically directed to the TxD line while normal receiver operation continues. The receiver must be enabled (CR2 = 1), but the transmitter need not be enabled. CPU to receiver communications continues normally, but the CPU to transmitter link is disabled. Only the first character of a break condition is echoed. The TxD output will go high until the next valid start is detected. The following conditions are true while in automatic echo mode:

1. Data assembled by the receiver are automatically placed in the transmit holding register and retransmitted by the transmitter on the TxD output.
2. The transmitter is clocked by the receive clock.
3. The $\overline{INTR}$ pin will reflect only the data set change condition.
4. The TxEN command (CR0) is ignored.

Two diagnostic submodes can also be configured. In local loop-back mode (CR7-CR6 = 10), the following loops are connected internally:

1. The transmitter output is connected to the receiver input.
2. $\overline{RTS}$ is connected to $\overline{CTS}$.
3. The receiver is clocked by the transmitter clock.
4. The $\overline{RTS}$ and $\overline{TxD}$ outputs are held high.
5. The $\overline{CTS}$, $\overline{DCD}$ and RxD inputs are ignored.

Additional requirements to operate in the local loop-back mode are that CR0 (TxEN), CR1 and CR5 (RTS) must be set to 1. CR2 (RxEN) is ignored by the 2641.

The second diagnostic mode is the remote loop-back mode (CR7-CR6 = 11). In this mode:

1. Data assembled by the receiver are automatically placed in the transmit holding register and retransmitted by the transmitter on the TxD output.
2. The transmitter is clocked by the receive clock.
3. No data are sent to the local CPU, but the error status conditions (PE, OE, FE) are set.
4. The $\overline{INTR}$ output is held high.
5. CR1 (TxEN) is ignored.
6. All other signals operate normally.

Status Register

The data contained in the status register (bits shown in Table 8) indicate receiver and transmitter conditions and modem/data set status.

SR0 is the transmitter ready (TxRDY) status bit. It is valid only when the transmitter is enabled. If equal to 0, it indicates that the transmit holding register has been loaded by the CPU and the data has not been transferred to the transmit shift register. If set equal to 1, it indicates that the holding register is ready to accept data from the CPU. This bit is initially set when the transmitter is enabled by CR0, unless a character has previously been loaded into the holding register. It is not set when the automatic echo or remote loop-back modes are programmed. When this bit is set, the $\overline{INTR}$ output pin is low, except in the automatic echo and remote loop-back modes.

SR1, the receiver ready (RxRDY) status bit, indicates the condition of the receive data holding register. If set, it indicates that a character has been loaded into the holding register from the receive shift register and is ready to be read by the CPU. If equal to 0, there is no new character in the holding register. This bit is cleared when the CPU reads the receive data holding register or when the receiver is disabled by CR2. When set, the $\overline{INTR}$ output is low.

The TxEMT/DSCHG bit, SR2, when set, indicates either a change of state of the $\overline{DCD}$ input (when CR2 or CR0 = 1) or that the transmit shift register has completed transmission of a character and no new character has been loaded into the transmit data holding register. TxEMT will not go active until at least one character has been transmitted. It is cleared by loading the transmit data holding register. The DSCHG condition is enabled when the TxEN = 1 or RxEN = 1. It is cleared when the status register is read by the CPU. If the status register is read twice and SR2 = 1 while SR6 remains unchanged, then a TxEMT condition exists. When SR2 is set, the $\overline{INTR}$ output is low.

SR3, when set, indicates a received parity error when parity is enabled by MR14. This bit is cleared when the receiver is disabled and by a reset error command, CR4.

The overrun error status bit, SR4, indicates that the previous character loaded into the receive holding register was not read by the CPU at the time a new received character was transferred into it. This bit is cleared when the receiver is disabled and by the reset error command, CR4.

Bit SR5 signifies that the received character was not framed by a stop bit; i.e., only the first stop bit is checked. If RHR = 0 when SR5 = 1, a break condition is present. The bit is reset when the receiver is disabled and when the reset error command is given.

SR6 reflects the condition of the DCD input. A low input sets the status bit and a high input clears it.

ABSOLUTE MAXIMUM RATINGS[1]

PARAMETER	RATING	UNIT
Operating ambient temperature[2]	0 to +70	°C
Storage temperature	−65 to +150	°C
All voltages with respect to ground[3]	−0.5 to +6.0	V

DC ELECTRICAL CHARACTERISTICS[4,5,6]

	PARAMETER	TEST CONDITIONS	LIMITS			UNIT
			Min	Typ	Max	
	Input voltage					V
V_{IL}	Low				0.8	
V_{IH}	High		2.0			
	Output voltage					V
V_{OL}	Low	I_{OL} = 2.2mA			0.4	
V_{OH}[7]	High	I_{OH} = −400μA	2.4			
I_{IL}	Input leakage current	V_{IN} = 0 to V_{CC}			10	μA
3-state	Output leakage current					μA
I_{LH}	Data bus high	V_O = 4.0V			10	
I_{LL}	Data bus low	V_O = 0.45V			10	
I_{CC}	Power supply current				150	mA

Notes on following page

CAPACITANCE $T_A = 25°C$, $V_{CC} = 0V$

	PARAMETER	TEST CONDITIONS	LIMITS Min	Typ	Max	UNIT
	Capacitance					pF
C_{IN}	Input	fc = 1MHz			20	
C_{OUT}	Output	Unmeasured pins tied to ground			20	
$C_{I/O}$	Input/Output				20	

AC ELECTRICAL CHARACTERISTICS $T_A = 0°C$ to $+70°C$, $V_{CC} = 5.0V \pm 5\%$[4,5,6]

	PARAMETER	TEST CONDITIONS	TENTATIVE LIMITS Min	Typ	Max	UNIT
	Pulse width					ns
t_{RES}	Reset		1000			
t_{CE}	Chip enable		250			
t_{CED}	CE to CE delay		600			
	Setup and hold time					ns
t_{AS}	Address setup		10			
t_{AH}	Address hold		10			
t_{CS}	$\overline{R}/W$ control setup		10			
t_{CH}	$\overline{R}/W$ control hold		10			
t_{DS}	Data setup for write		150			
t_{DH}	Data hold for write		10			
t_{RXS}	Rx data setup		300			
t_{RXH}	Rx data hold		350			
t_{DD}	Data delay time for read	C_L = 150pF			200	ns
t_{DF}	Data bus floating time for read	C_L = 150pF			100	ns
	Input clock frequency					MHz
f_{BRG}	Baud rate generator		1.0	3.6864	4.0	
$f_{R/T}$[10]	$\overline{TxC}$ or $\overline{RxC}$		dc		1.0	
	Clock state					ns
t_{BRH}[9]	Baud rate high		90			
t_{BRL}[9]	Baud rate low		90			
$t_{R/TH}$	$\overline{TxC}$ or $\overline{RxC}$ high		480			
$t_{R/TL}$[10]	$\overline{TxC}$ or $\overline{RxC}$ low		480			
t_{TXD}	TxD delay from falling edge of $\overline{TxC}$	C_L = 150pF			650	ns
t_{TCS}	Skew between TxD changing and falling edge of $\overline{TxC}$ output[8]	C_L = 150pF		0		ns

NOTES

1. Stresses above those listed under Absolute Maximum Ratings may cause permanent damage to the device. This is a stress rating only and functional operation of the device at these or at any other condition above those indicated in the operation section of this specification is not implied.
2. For operating at elevated temperatures, the device must be derated based on +150°C maximum junction temperature.
3. This product includes circuitry specifically designed for the protection of its internal devices from the damaging effects of excessive static charge. Nonetheless, it is suggested that conventional precautions be taken to avoid applying any voltages larger than the rated maxima.
4. Parameters are valid over operting temperature range unless otherwise specified.
5. All voltage measurements are referenced to ground. All time measurements are at the 50% level for inputs (except t_{BRH} and t_{BRL}) and at 0.8V and 2.0V for outputs. Input levels swing between 0.4V and 2.4V, with a transition time of 20ns maximum.
6. Typical values are at +25°C, typical supply voltages and typical processing parameters.
7. $\overline{INTR}$ output is open drain.
8. Parameter applies when internal transmitter clock is used.
9. t_{BRH} and t_{BRL} measured at V_{IH} and V_{IL} respectively.
10. In asynchronous local loopback mode, using 1X clock, the following parameters apply:
    $t_{R/T}$ = 0.83MHz max.
    $t_{R/TL}$ = 700ns min.

TIMING DIAGRAMS

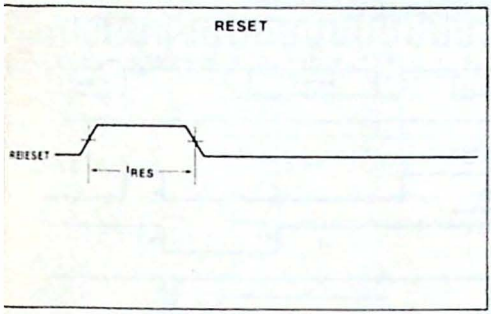

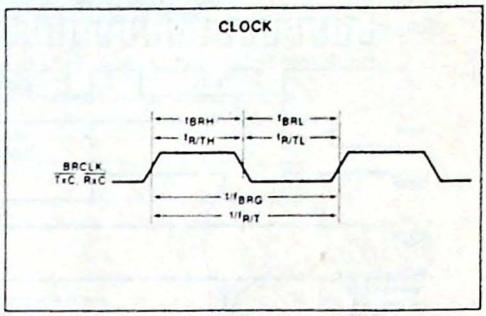

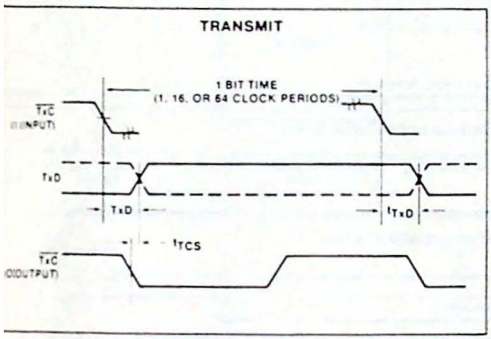

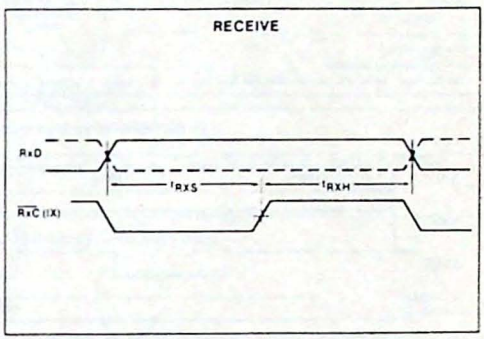

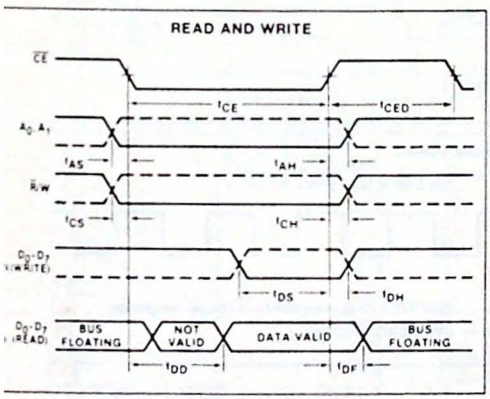

TIMING DIAGRAMS (Cont'd)

TxRDY, TxEMT (Shown for 5-bit characters, no parity, 2 stop bits)

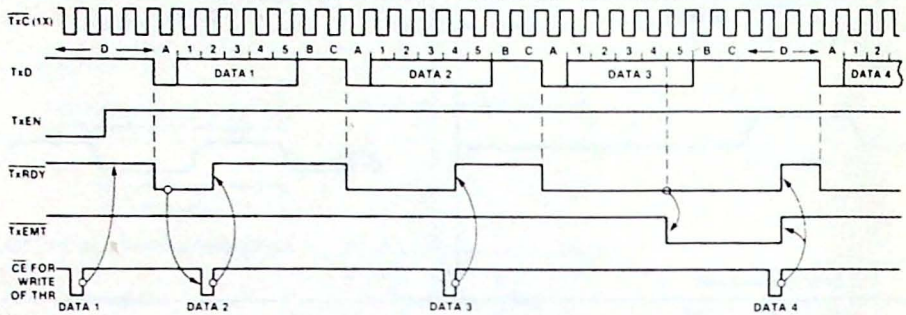

NOTES
A = Start bit
B = Stop bit 1
C = Stop bit 2
D = TxD marking condition
TxEMT goes low at the beginning of the last data bit, or, if parity is enabled, at the beginning of the parity bit

RxRDY (Shown for 5-bit characters, no parity, 2 stop bits)

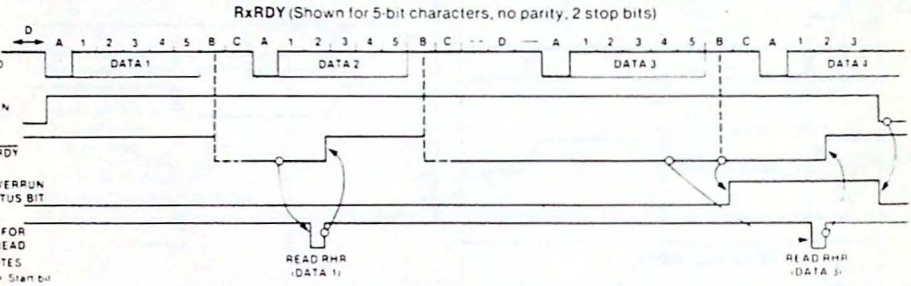

NOTES
A = Start bit
B = Stop bit 1
C = Stop bit 2
D = TxD marking condition
(Only one stop bit is detected)

BREAK DETECTION TIMING

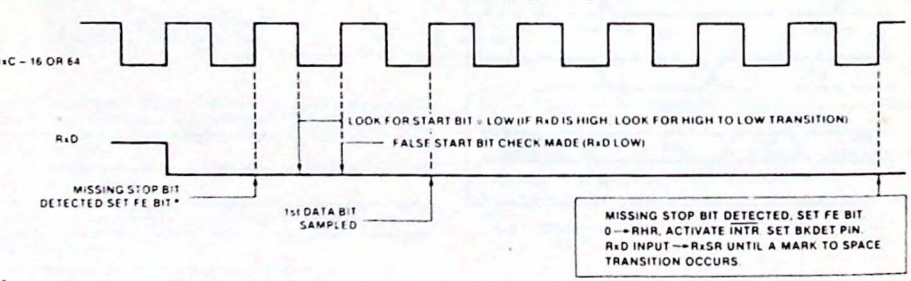

NOTE
*If the stop bit is present, the start bit search will commence immediately.

TYPICAL APPLICATIONS

ASYNCHRONOUS INTERFACE TO CRT TERMINAL

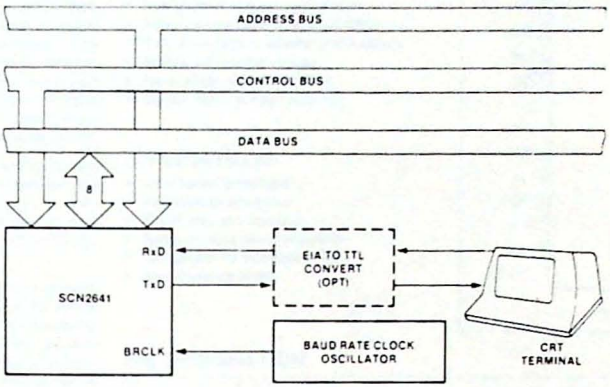

ASYNCHRONOUS INTERFACE TO TELEPHONE LINES

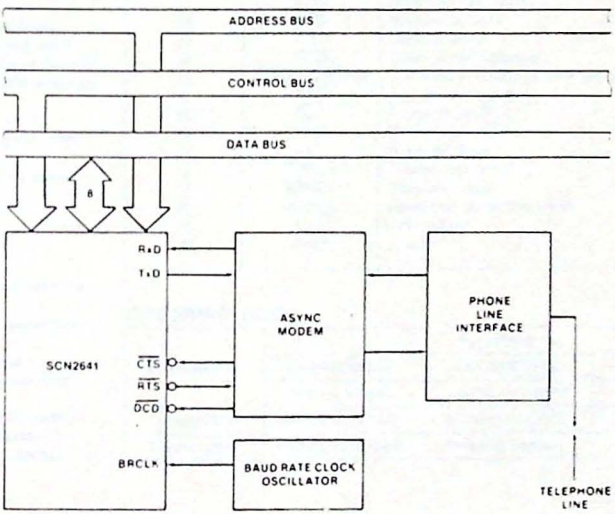

DESCRIPTION

The Signetics SCN2651 PCI is a universal synchronous/asynchronous data communications controller chip designed for microcomputer systems. It interfaces directly to the Signetics SCN2650 microprocessor and may be used in a polled or interrupt driven system environment. The SCN2651 accepts programmed instructions from the microprocessor and supports many serial data communication disciplines, synchronous and asynchronous, in the full or half-duplex mode.

The PCI serializes parallel data characters received from the microprocessor for transmission. Simultaneously, it can receive serial data and convert it into parallel data characters for input to the microcomputer.

The SCN2651 contains a baud rate generator which can be programmed to either accept an external clock or to generate internal transmit or receive clocks. Sixteen different baud rates can be selected under program control when operating in the internal clock mode.

The PCI is constructed using Signetics n-channel silicon gate depletion load technology and is packaged in a 28-pin DIP.

FEATURES

- Synchronous operation
  - 5 to 8-bit characters
  - Single or double SYN operation
  - Internal character synchronization
  - Transparent or non-transparent mode
  - Automatic SYN or DLE-SYN insertion
  - SYN or DLE stripping
  - Odd, even, or no parity
  - Local or remote maintenance loop back mode
  - Baud rate: dc to 1M bps (1X clock)
- Asynchronous operation
  - 5 to 8-bit characters
  - 1, 1 1/2 or 2 stop bits
  - Odd, even, or no parity
  - Parity, overrun and framing error detection
  - Line break detection and generation
  - False start bit detection
  - Automatic serial echo mode
  - Local or remote maintenance loop back mode
  - Baud rate: dc to 1M bps (1X clock)
    dc to 62.5K bps (16X clock)
    dc to 15.625K bps (64X clock)

OTHER FEATURES

- Internal or external baud rate clock
- 16 internal rates-50 to 19,200 baud
- Double buffered transmitter and receiver
- Full or half duplex operation
- Fully compatible with 2650 CPU
- TTL compatible inputs and outputs
- Single 5V power supply
- No system clock required
- 28-pin dual in-line package

APPLICATIONS

- Intelligent terminals
- Network processors
- Front end processors
- Remote data concentrators
- Computer to computer links
- Serial peripherals

PIN CONFIGURATION

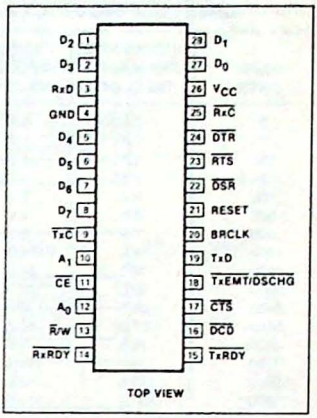

PIN DESIGNATION

PIN NO.	SYMBOL	NAME AND FUNCTION	TYPE
27,28,1,2, 5-8	D_0-D_7	8-bit data bus	I/O
21	RESET	Reset	I
12,10	A_0-A_1	Internal register select lines	I
13	$\overline{R}$/W	Read or write command	I
11	$\overline{CE}$	Chip enable input	I
22	$\overline{DSR}$	Data set ready	I
24	$\overline{DTR}$	Data terminal ready	O
23	$\overline{RTS}$	Request to send	O
17	$\overline{CTS}$	Clear to send	I
16	$\overline{DCD}$	Data carrier detected	I
18	$\overline{TxEMT/DSCHG}$	Transmitter empty or data set change	O
9	$\overline{TxC}$	Transmitter clock	I/O
25	$\overline{RxC}$	Receiver clock	I/O
19	TxD	Transmitter data	O
3	RxD	Receiver data	I
15	$\overline{TxRDY}$	Transmitter ready	O
14	$\overline{RxRDY}$	Receiver ready	O
20	BRCLK	Baud rate generator clock	I
26	V_{CC}	+5V supply	I
4	GND	Ground	I

ORDERING CODE

PACKAGES	V_{CC} = 5V ± 5%		
	COMMERCIAL	AUTOMOTIVE	MILITARY
	0°C to +70°C	−40°C to +85°C	−55°C to +125°C
Ceramic DIP	SCN2651CC1I28	SCN2651CA1I28	SCN2651CM1I28
Plastic DIP	SCN2651CC1N28	Contact Factory	Not Available

Table 1 BAUD RATE GENERATOR CHARACTERISTICS CRYSTAL FREQUENCY = 5.0688MHz

BAUD RATE	THEORETICAL FREQUENCY 16X CLOCK	ACTUAL FREQUENCY 16X CLOCK	PERCENT ERROR	DIVISOR
50	0.8 KHz	0.8 KHz	--	6336
75	1.2	1.2	--	4224
110	1.76	1.76	--	2880
134.5	2.152	2.1523	0.016	2355
150	2.4	2.4	--	2112
300	4.8	4.8	--	1056
600	9.6	9.6	--	528
1200	19.2	19.2	--	264
1800	28.8	28.8	--	176
2000	32.0	32.081	0.253	158
2400	38.4	38.4	--	132
3600	57.6	57.6	--	88
4800	76.8	76.8	--	66
7200	115.2	115.2	--	44
9600	153.6	153.6	--	33
19200*	307.2	316.8	3.125	16

NOTE
*Error at 19200 can be reduced to zero by using crystal frequency 4.9152MHz
16X clock is used in asynchronous mode. In synchronous mode, clock multiplier is 1X.

Table 2 CPU-RELATED SIGNALS

PIN NAME	PIN NO.	INPUT/OUTPUT	FUNCTION
V_{CC}	26	I	+5V supply input
GND	4	I	Ground
RESET	21	I	A high on this input performs a master reset on the SCN2651. This signal asynchronously terminates any device activity and clears the Mode, Command and Status registers. The device assumes the idle state and remains there until initialized with the appropriate control words.
A_1-A_0	10,12	I	Address lines used to select internal PCI registers.
$\overline{R}$/W	13	I	Read command when low, write command when high.
$\overline{CE}$	11	I	Chip enable command. When low, indicates that control and data lines to the PCI are valid and that the operation specified by the $\overline{R}$/W, A_1 and A_0 inputs should be performed. When high, places the D_0-D_7 lines in the tri-state condition.
D_7-D_0	8,7,6,5, 2,1,28,27	I/O	8-bit, three-state data bus used to transfer commands, data and status between PCI and the CPU. D_0 is the least significant bit; D_7 the most significant bit.
$\overline{TxRDY}$	15	O	This output is the complement of Status Register bit SR0. When low, it indicates that the Transmit Data Holding Register (THR) is ready to accept a data character from the CPU. It goes high when the data character is loaded. This output is valid only when the transmitter is enabled. It is an open drain output which can be used as an interrupt to the CPU.
$\overline{RxRDY}$	14	O	This output is the complement of Status Register bit SR1. When low, it indicates that the Receive Data Holding Register (RHR) has a character ready for input to the CPU. It goes high when the RHR is read by the CPU, and also when the receiver is disabled. It is an open drain output which can be used as an interrupt to the CPU.
$\overline{TxEMT}$/$\overline{DSCHG}$	18	O	This output is the complement of Status Register bit SR2. When low, it indicates that the transmitter has completed serialization of the last character loaded by the CPU, or that a change of state of the $\overline{DSR}$ or $\overline{DCD}$ inputs has occurred. This output goes high when the Status Register is read by the CPU, if the TxEMT condition does not exist. Otherwise, the THR must be loaded by the CPU for this line to go high. It is an open drain output which can be used as an interrupt to the CPU.

BLOCK DIAGRAM

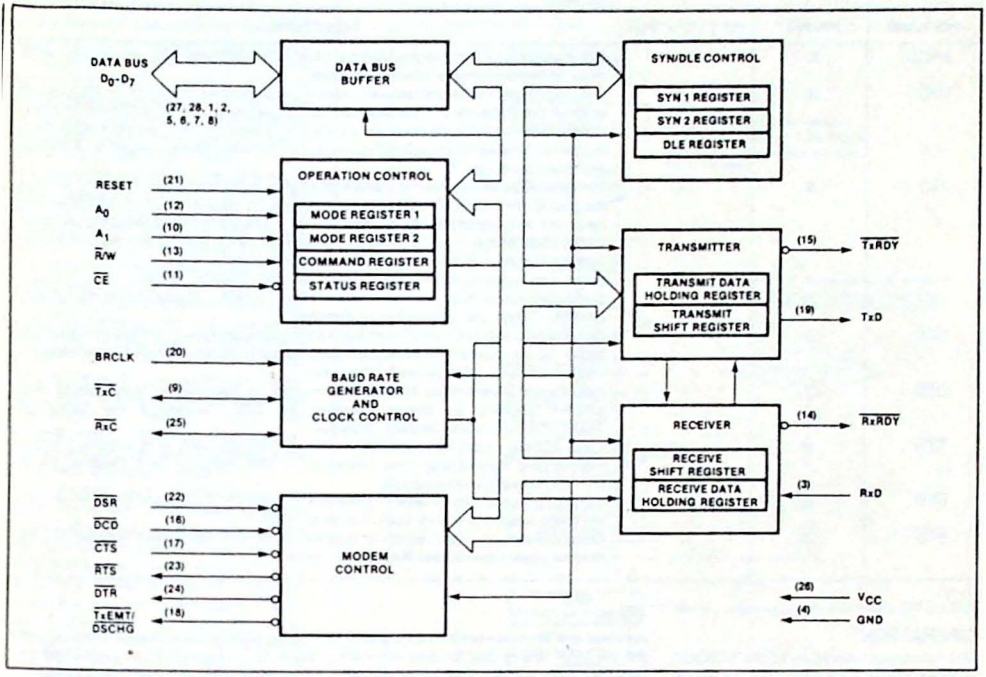

BLOCK DIAGRAM

The PCI consists of six major sections. These are the transmitter, receiver, timing, operation control, modem control and SYN/DLE control. These sections communicate with each other via an internal data bus and an internal control bus. The internal data bus interfaces to the microprocessor data bus via a data bus buffer.

Operation Control

This functional block stores configuration and operation commands from the CPU and generates appropriate signals to various internal sections to control the overall device operation. It contains read and write circuits to permit communications with the microprocessor via the data bus and contains Mode Registers 1 and 2, the Command Register, and the Status Register. Details of register addressing and protocol are presented in the PCI Programming section of this data sheet.

Timing

The PCI contains a Baud Rate Generator (BRG) which is programmable to accept external transmit or receive clocks or to divide an external clock to perform data communications. The unit can generate 16 commonly used baud rates, any one of which can be selected for full duplex operation. See Table 1.

Receiver

The Receiver accepts serial data on the RxD pin, converts this serial input to parallel format, checks for bits or characters that are unique to the communication technique and sends an "assembled" character to the CPU.

Transmitter

The Transmitter accepts parallel data from the CPU, converts it to a serial bit stream, inserts the appropriate characters or bits (based on the communication technique) and outputs a composite serial stream of data on the TxD output pin.

Modem Control

The modem control section provides interfacing for three input signals and three output signals used for "handshaking" and status indication between the CPU and a modem.

SYN/DLE Control

This section contains control circuitry and three 8-bit registers storing the SYN1, SYN2, and DLE characters provided by the CPU. These registers are used in the synchronous mode of operation to provide the characters required for synchronization, idle fill and data transparency.

INTERFACE SIGNALS

The PCI interface signals can be grouped into two types: the CPU-related signals (shown in Table 2), which interface the 2651 to the microprocessor system, and the device-related signals (shown in Table 3), which are used to interface to the communications device or system.

Table 3 DEVICE-RELATED SIGNALS

PIN NAME	PIN NO.	INPUT/OUTPUT	FUNCTION
BRCLK	20	I	5.0688MHz clock input to the internal baud rate generator. Not required if external receiver and transmitter clocks are used.
$\overline{RxC}$	25	I/O	Receiver clock. If external receiver clock is programmed, this input controls the rate at which the character is to be received. Its frequency is 1X, 16X or 64X the baud rate, as programmed by Mode Register 1. Data is sampled on the rising edge of the clock. If internal receiver clock is programmed, this pin becomes an output at 1X the programmed baud rate.*
$\overline{TxC}$	9	I/O	Transmitter clock. If external transmitter clock is programmed, this input controls the rate at which the character is transmitted. Its frequency is 1X, 16X or 64X the baud rate, as programmed by Mode Register 1. The transmitted data changes on the falling edge of the clock. If internal transmitter clock is programmed, this pin becomes an output at 1X the programmed baud rate.*
RxD	3	I	Serial data input to the receiver. "Mark" is high, "Space" is low.
TxD	19	O	Serial data output from the transmitter. "Mark" is high, "Space" is low. Held in Mark condition when the transmitter is disabled.
$\overline{DSR}$	22	I	General purpose input which can be used for Data Set Ready or Ring Indicator condition. Its complement appears as Status Register bit SR7. Causes a low output on $\overline{TxEMT}$/DSCHG when its state changes.
$\overline{DCD}$	16	I	Data Carrier Detect input. Must be low in order for the receiver to operate. Its complement appears as Status Register bit SR6. Causes a low output on $\overline{TxEMT}$/DSCHG when its state changes.
$\overline{CTS}$	17	I	Clear to Send input. Must be low in order for the transmitter to operate. If it goes high during transmission, the character in the Transmit Shift Register will be transmitted before termination.
$\overline{DTR}$	24	O	General purpose output which is the complement of Command Register bit CR1. Normally used to indicate Data Terminal Ready.
$\overline{RTS}$	23	O	General purpose output which is the complement of Command Register bit CR5. Normally used to indicate Request to Send.

NOTE:
*$\overline{RxC}$ and $\overline{TxC}$ outputs have short circuit protection max. C_L 100pf

OPERATION

The functional operation of the SCN2651 is programmed by a set of control words supplied by the CPU. These control words specify items such as synchronous or asynchronous mode, baud rate, number of bits per character, etc. The programming procedure is described in the PCI Programming section of this data sheet.

After programming, the PCI is ready to perform the desired communications functions. The receiver performs serial to parallel conversion of data received from a modem or equivalent device. The transmitter converts parallel data received from the CPU to a serial bit stream. These actions are accomplished within the framework specified by the control words.

Receiver

The SCN2651 is conditioned to receive data when the $\overline{DCD}$ input is low and the RxEN bit in the command register is true. In the asynchronous mode, the receiver looks for a high to low transition of the start bit on the RxD input line. If a transition is detected, the state of the RxD line is sampled again after a delay of one-half of a bit time. If RxD is now high, the search for a valid start bit is begun again. If RxD is still low, a valid start bit is assumed and the receiver continues to sample the input line at one bit time intervals until the proper number of data bits, the parity bit, and the stop bit(s) have been assembled. The data is then transferred to the Receive Data Holding Register, the RxRDY bit in the status register is set, and the $\overline{RxRDY}$ output is asserted. If the character length is less than 8 bits, the high order unused bits in the Holding Register are set to zero. The Parity Error, Framing Error, and Overrun Error status bits are strobed into the status register on the positive going edge of $\overline{RxC}$ corresponding to the received character boundary. If a break condition is detected (RxD is low for the entire character as well as the stop bit(s)), only one character consisting of all zeros (with the FE status bit set) will be transferred to the Holding Register. The RxD input must return to a high condition before a search for the next start bit begins.

When the PCI is initialized into the synchronous mode, the receiver first enters the hunt mode on a 0 to 1 transition of RxEN (CR2). In this mode, as data is shifted into the Receiver Shift Register a bit at a time, the contents of the register are compared to the contents of the SYN1 register. If the two are not equal, the next bit is shifted in and the comparison is repeated. When the two registers match, the hunt mode is terminated and character assembly mode begins. If single SYN operation is programmed, the SYN DETECT status bit is set. If double SYN operation is programmed, the first character assembled after SYN1 must be SYN2 in order for the SYN DETECT bit to be set. Otherwise, the PCI returns to the hunt mode. (Note that the sequence SYN1-SYN1-SYN2 will not achieve synchronization). When synchronization has been achieved, the PCI continues to assemble characters and transfer them to the Holding Register, setting the RxRDY status bit and asserting the $\overline{RxRDY}$ output each time a character is transferred. The PE and OE status bits are set as appropriate. Further receipt of the appropriate SYN sequence sets the SYN DETECT status bit. If the SYN stripping mode is commanded, SYN characters are not transferred to the Holding Register. Note that the SYN characters used to establish initial synchronization are not transferred to the Holding Register in any case.

Transmitter

The PCI is conditioned to transmit data when the $\overline{CTS}$ input is low and the TxEN command register bit is set. The SCN2651 indicates to the CPU that it can accept a character for transmission by setting the

TxRDY status bit and asserting the $\overline{\text{TxRDY}}$ output. When the CPU writes a character into the Transmit Data Holding Register, these conditions are negated. Data is transferred from the Holding Register to the Transmit Shift Register when it is idle or has completed transmission of the previous character. The TxRDY conditions are then asserted again. Thus, one full character time of buffering is provided.

In the asynchronous mode, the transmitter automatically sends a start bit followed by the programmed number of data bits, the least significant bit being sent first. It then appends an optional odd or even parity bit and the programmed number of stop bits. If, following transmission of the data bits, a new character is not available in the Transmit Holding Register, the TxD output remains in the marking (high) condition and the $\overline{\text{TxEMT}}$/$\overline{\text{DSCHG}}$ output and its corresponding status bit are asserted. Transmission resumes when the CPU loads a new character into the Holding Register. The transmitter can be forced to output a continuous low (BREAK) condition by setting the Send Break command bit high.

In the synchronous mode, when the SCN2651 is initially conditioned to transmit, the TxD output remains high and the TxRDY condition is asserted until the first character to be transmitted (usually a SYN character) is loaded by the CPU. Subsequent to this, a continuous stream of characters is transmitted. No extra bits (other than parity, if commanded) are generated by the PCI unless the CPU fails to send a new character to the PCI by the time the transmitter has completed sending the previous character.

Since synchronous communication does not allow gaps between characters, the PCI asserts TxEMT and automatically "fills" the gap by transmitting SYN1s, SYN1-SYN2 doublets, or DLE-SYN1 doublets, depending on the state of MR16 and MR17. Normal transmission of the message resumes when a new character is available in the Transmit Data Holding Register. If the SEND DLE bit in the command register is true, the DLE character is automatically transmitted prior to transmission of the message character in THR.

PCI PROGRAMMING

Prior to initiating data communications, the SCN2651 operational mode must be programmed by performing write operations to the mode and command registers. In addition, if synchronous operation is programmed, the appropriate SYN/DLE registers must be loaded. The PCI can be reconfigured at any time during program execution. However, if the change has an effect on the reception of a character the receiver should be disabled. Alternatively if

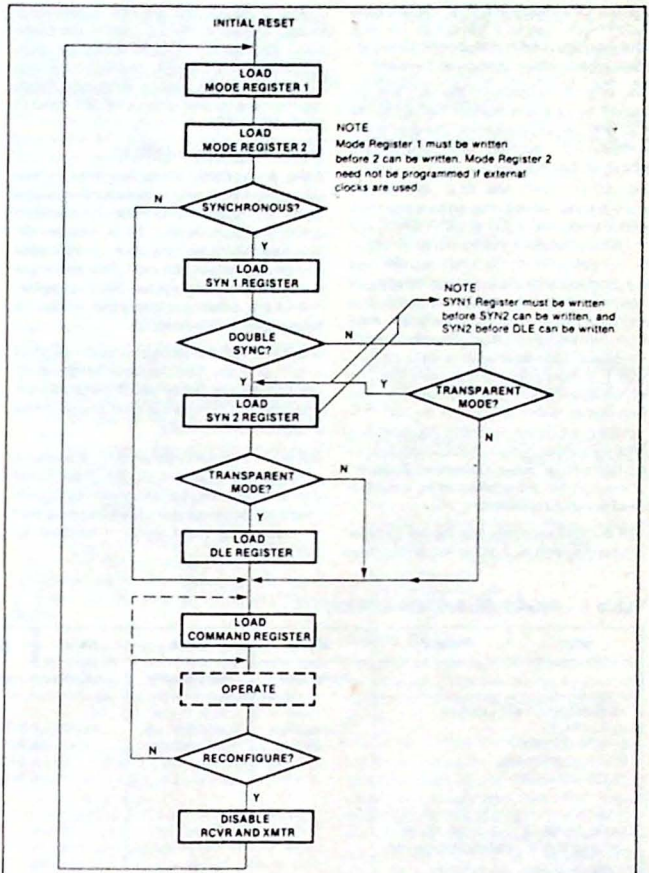

Figure 1. 2651 Initialization Flow Chart

Table 4 2651 REGISTER ADDRESSING

$\overline{\text{CE}}$	A_1	A_0	$\overline{\text{R}}$/W	FUNCTION
1	X	X	X	Tri-state data bus
0	0	0	0	Read receive holding register
0	0	0	1	Write transmit holding register
0	0	1	0	Read status register
0	0	1	1	Write SYN1/SYN2/DLE registers
0	1	0	0	Read mode registers 1/2
0	1	0	1	Write mode registers 1/2
0	1	1	0	Read command register
0	1	1	1	Write command register

NOTE
See AC Characteristics section for timing requirements

the change is made 1½ RxC periods after RxRDY goes active it will affect the next character assembly. A flowchart of the initialization process appears in Figure 1.

The internal registers of the PCI are accessed by applying specific signals to the $\overline{CE}$, $\overline{R}/W$, A_1 and A_0 inputs. The conditions necessary to address each register are shown in Table 4.

The SYN1, SYN2, and DLE registers are accessed by performing write operations with the conditions $A_1 = 0$, $A_0 = 1$, and $\overline{R}/W = 1$. The first operation loads the SYN1 register. The next loads the SYN2 register, and the third loads the DLE register. Reading or loading the mode registers is done in a similar manner. The first write (or read) operation addresses Mode Register 1, and a subsequent operation addresses Mode Register 2. If more than the required number of accesses are made, the internal sequencer recycles to point at the first register. The pointers are reset to SYN1 Register and Mode Register 1 by a RESET input or by performing a "Read Command Register" operation, but are unaffected by any other read or write operation.

The SCN2651 register formats are summarized in Tables 5, 6, 7 and 8. Mode Registers 1 and 2 define the general operational characteristics of the PCI, while the Command Register controls the operation within this basic frame-work. The PCI indicates its status in the Status Register, these registers are cleared when a RESET input is applied.

Mode Register 1 (MR1)

Table 5 illustrates Mode Register 1. Bits MR11 and MR10 select the communication format and baud rate multiplier. 00 specifies synchronous mode and 1X multiplier. 1X, 16X, and 64X multipliers are programmable for asynchronous format. However, the multiplier in asynchronous format applies only if the external clock input option is selected by MR24 or MR25.

MR13 and MR12 select a character length of 5, 6, 7, or 8 bits. The character length does not include the parity bit, if programmed, and does not include the start and stop bits in asynchronous mode.

MR14 controls parity generation. If enabled, a parity bit is added to the transmitted character and the receiver performs a parity check on incoming data. MR15 selects odd or even parity when parity is enabled by MR14.

In asychronous mode, MR17 and MR16 select character framing of 1, 1.5, or 2 stop bits. (If 1X baud rate is programmed, 1.5 stop bits defaults to 1 stop bits on transmit). In synchronous mode, MR17 controls the number of SYN characters used to establish synchronization and for character fill when the transmitter is idle. SYN1 alone is used if MR17 = 1, and SYN1-SYN2 is used when MR17 = 0. If the transparent mode is specified by MR16, DLE-SYN1 is used for character fill and SYN Detect, but the normal synchronization sequence is used. Also DLE stripping and DLE Detect (with MR14 = 0) are enabled.

Mode Register 2 (MR2)

Table 6 illustrates Mode Register 2. MR23, MR22, MR21, and MR20 control the frequency of the internal baud rate generator (BRG). Sixteen rates are selectable. When driven by a 5.0688 MHz input at the BRCLK input (pin 20), the BRG output has zero error except at 134.5, 2000, and 19,200 baud, which have errors of +0.016%, +0.235%, and +3.125% respectively.

MR25 and MR24 select either the BRG or the external inputs $\overline{TxC}$ and $\overline{RxC}$ as the clock source for the transmitter and receiver, respectively. If the BRG clock is selected,

Table 5 MODE REGISTER 1 (MR1)

MR17	MR16	MR15	MR14	MR13	MR12	MR11	MR10
		Parity Type	Parity Control	Character Length		Mode and Baud Rate Factor	
ASYNCH: STOP BIT LENGTH 00 = INVALID 01 = 1 STOP BIT 10 = 1½ STOP BITS 11 = 2 STOP BITS		0 = ODD 1 = EVEN	0 = DISABLED 1 = ENABLED	00 = 5 BITS 01 = 6 BITS 10 = 7 BITS 11 = 8 BITS		00 = SYNCHRONOUS 1X RATE 01 = ASYNCHRONOUS 1X RATE 10 = ASYNCHRONOUS 16X RATE 11 = ASYNCHRONOUS 64X RATE	
SYNCH: NUMBER OF SYN CHAR 0 = DOUBLE SYN 1 = SINGLE SYN	SYNCH: TRANSPARENCY CONTROL 0 = NORMAL 1 = TRANSPARENT						

NOTE
Baud rate factor in asynchronous applies only if external clock is selected. Factor is 16X if internal clock is selected. Mode must be selected (MR11, MR10) in any case.

Table 6 MODE REGISTER 2 (MR2)

MR27	MR26	MR25	MR24	MR23	MR22	MR21	MR20
		Transmitter Clock	Receiver Clock	Baud Rate Selection			
NOT USED		0 = EXTERNAL 1 = INTERNAL	0 = EXTERNAL 1 = INTERNAL	0000 = 50 BAUD 0001 = 75 0010 = 110 0011 = 134.5 0100 = 150 0101 = 300 0110 = 600 0111 = 1200		1000 = 1800 BAUD 1001 = 2000 1010 = 2400 1011 = 3600 1100 = 4800 1101 = 7200 1110 = 9600 1111 = 19,200	

the baud rate factor in asynchronous mode is 16X regardless of the factor selected by MR11 and MR10. In addition, the corresponding clock pin provides an output at 1X the baud rate.

Command Register (CR)

Table 7 illustrates Command Register. Bits CR0 (TxEN) and CR2 (RxEN) enable or disable the transmitter and receiver respectively. A 0 to 1 transition of CR2 forces start bit search (async mode) or hunt mode (sync mode) on the second $\overline{RxC}$ rising edge. Disabling the receiver causes $\overline{RxRDY}$ to go high (inactive). If the transmitter is disabled, it will complete the transmission of the character in the Transmit Shift Register (if any) prior to terminating operation. The TxD output will then remain in the marking state (high) while the $\overline{TxRDY}$ and $\overline{TxEMT}$ will go high (inactive). If the receiver is disabled, it will terminate operation immediately. Any character being assembled will be neglected.

Bits CR1 (DTR) and CR5 (RTS) control the $\overline{DTR}$ and $\overline{RTS}$ outputs. Data at the outputs is the logical complement of the register data.

In asynchronous mode, setting CR3 will force and hold the TxD output low (spacing condition) at the end of the current transmitted character. Normal operation resumes when CR3 is cleared. The TxD line will go high for a least one bit time before beginning transmission of the next character in the Transmit Data Holding Register. In synchronous mode, setting CR3 causes the transmission of the DLE register contents prior to sending the character in the Transmit Data Holding Register. CR3 should be reset in response to the next TxRDY.

Setting CR4 causes the error flags in the Status Register (SR3, SR4, and SR5) to be cleared. This is a one time command. There is no internal latch for this bit.

The PCI can operate in one of four sub-modes within each major mode (synchronous or asynchronous). The operational sub-mode is determined by CR7 and CR6. CR7-CR6 = 00 is the normal mode, with the transmitter and receiver operating independently in accordance with the Mode and Status Register instructions.

In asynchronous mode, CR7-CR6 = 01 places the PCI in the Automatic Echo mode. Clocked, regenerated received data is automatically directed to the TxD line while normal receiver operation continues. The receiver must be enabled (CR2 = 1), but the transmitter need not be enabled. CPU to receiver communications continues normally, but the CPU to transmitter link is disabled. Only the first character of a break condition is echoed. The TxD output will go high until the next valid start is detected. The following conditions are true while in Automatic Echo mode:

1. Data assembled by the receiver is automatically placed in the Transmit Holding Register and retransmitted by the transmitter on the TxD output.
2. The transmitter is clocked by the receive clock.
3. $\overline{TxRDY}$ output = 1.
4. The $\overline{TxEMT}/\overline{DSCHG}$ pin will reflect only the data set change condition.
5. The TxEN command (CR0) is ignored.

In synchronous mode, CR7-CR6 = 01 places the PCI in the Automatic SYN/DLE Stripping mode. The exact action taken depends on the setting of bits MR17 and MR16:

1. In the non-transparent, single SYN mode (MR17-MR16 = 10), characters in the data stream matching SYN1 are not transferred to the Receive Data Holding Register (RHR).
2. In the non-transparent, double SYN mode (MR17-MR16 = 00), characters in the data stream matching SYN1, or SYN2 if immediately preceded by SYN1, are not transferred to the RHR. However, only the first SYN1 of an SYN1-SYN1 pair is stripped.
3. In transparent mode (MR16 = 1), characters in the data stream matching DLE, or SYN1 if immediately preceded by DLE, are not transferred to the RHR. However, only the first DLE of a DLE-DLE pair is stripped.

Note that Automatic Stripping mode does not affect the setting of the DLE Detect and SYN Detect status bits (SR3 and SR5).

Two diagnostic sub-modes can also be configured. In Local Loop Back mode (CR7-CR6 = 10), the following loops are connected internally:

1. The transmitter output is connected to the receiver input.
2. $\overline{DTR}$ is connected to $\overline{DCD}$ and $\overline{RTS}$ is connected to $\overline{CTS}$.
3. The receiver is clocked by the transmit clock.
4. The $\overline{DTR}$, $\overline{RTS}$ and $\overline{TxD}$ outputs are held high.
5. The $\overline{CTS}$, $\overline{DCD}$, $\overline{DSR}$ and RxD inputs are ignored.

Additional requirements to operate in the Local Loop Back mode are that CR0 (TxEN), CR1 (DTR), and CR5 (RTS) must be set to 1. CR2 (RxEN) is ignored by the PCI.

The second diagnostic mode is the Remote Loop Back mode (CR7-CR6 = 11). In this mode:

1. Data assembled by the receiver is automatically placed in the Transmit Holding Register and retransmitted by the transmitter on the TxD output.
2. The transmitter is clocked by the receive clock.
3. No data is sent to the local CPU, but the error status conditions (PE, OE, FE) are set.
4. The $\overline{RxRDY}$, $\overline{TxRDY}$, and $\overline{TxEMT}/\overline{DSCHG}$ outputs are held high.
5. CR1 (TxEN) is ignored.
6. All other signals operate normally.

Status Register

The data contained in the Status Register (as shown in Table 8) indicate receiver and transmitter conditions and modem/data set status.

SR0 is the Transmitter Ready (TxRDY) status bit. It, and its corresponding output, are valid only when the transmitter is enabled. If equal to 0, it indicates that the Transmit Data Holding Register has been loaded by the CPU and the data has not been transferred to the Transmit Shift Register. If set equal to 1, it indicates that the Holding Register is ready to accept data from the CPU. This bit is initially set when the Transmitter is enabled by CR0, unless a character

Table 7 COMMAND REGISTER (CR)

CR7	CR6	CR5	CR4	CR3	CR2	CR1	CR0
Operating Mode		Request to Send	Reset Error		Receive Control (RxEN)	Data Terminal Ready	Transmit Control (TxEN)
00 = NORMAL OPERATION 01 = ASYNCH: AUTOMATIC ECHO MODE SYNCH: SYN AND/OR DLE STRIPPING MODE 10 = LOCAL LOOP BACK 11 = REMOTE LOOP BACK		0 = FORCE $\overline{RTS}$ OUTPUT HIGH 1 = FORCE $\overline{RTS}$ OUTPUT LOW	0 = NORMAL 1 = RESET ERROR FLAG IN STATUS REG (FE, OE, PE/DLE DETECT)	**ASYNCH: FORCE BREAK** 0 = NORMAL 1 = FORCE BREAK **SYNCH: SEND DLE** 0 = NORMAL 1 = SEND DLE	0 = DISABLE 1 = ENABLE	0 = FORCE $\overline{DTR}$ OUTPUT HIGH 1 = FORCE $\overline{DTR}$ OUTPUT LOW	0 = DISABLE 1 = ENABLE

Table 8 STATUS REGISTER (SR)

SR7	SR6	SR5	SR4	SR3	SR2	SR1	SR0
Data Set Ready	**Data Carrier Detect**	**FE/SYN Detect**	**Overrrun**	**PE/DLE Detect**	**TxEMT/DSCHG**	**RxRDY**	**TxRDY**
0 = $\overline{DSR}$ INPUT IS HIGH 1 = $\overline{DSR}$ INPUT IS LOW	0 = $\overline{DCD}$ INPUT IS HIGH 1 = $\overline{DCD}$ INPUT IS LOW	**ASYNCH:** 0 = NORMAL 1 = FRAMING ERROR **SYNCH:** 0 = NORMAL 1 = SYN CHAR DETECTED	0 = NORMAL 1 = OVERRUN ERROR	**ASYNCH:** 0 = NORMAL 1 = PARITY ERROR **SYNCH:** 0 = NORMAL 1 = PARITY ERROR OR DLE CHAR RECEIVED	0 = NORMAL 1 = CHANGE IN $\overline{DSR}$ OR $\overline{DCD}$, OR TRANSMIT SHIFT REGISTER IS EMPTY	0 = RECEIVE HOLDING REG EMPTY 1 = RECEIVE HOLDING REG HAS DATA	0 = TRANSMIT HOLDING REG BUSY 1 = TRANSMIT HOLDING REG EMPTY

has previously been loaded into the Holding Register. It is not set when the Automatic Echo or Remote Loop Back modes are programmed. When this bit is set, the $\overline{TxRDY}$ output pin is low. In the Automatic Echo and Remote Loop Back modes, the output is held high.

SR1, the Receiver Ready (RxRDY) status bit, indicates the condition of the Receive Data Holding Register. If set, it indicates that a character has been loaded into the Holding Register from the Receive Shift Register and is ready to be read by the CPU. If equal to zero, there is no new character in the Holding Register. This bit is cleared when the CPU reads the Receive Data Holding Register or when the receiver is disabled by CR2. When set, the $\overline{RxRDY}$ output is low.

The TxEMT/DSCHG bit, SR2, when set, indicates either a change of state of the $\overline{DSR}$ or $\overline{DCD}$ inputs or that the Transmit Shift Register has completed transmission of a character and no new character has been loaded into the Transmit Data Holding Register. Note that in synchronous mode this bit will be set even though the appropriate "fill" character is transmitted. TxEMT will not go active until at least one character has been transmitted. It is cleared by loading the Transmit Data Holding Register. The DSCHG condition is enabled when TxEN=1 or RxEN=1. It is cleared when the Status Register is read by the CPU. When SR2 is set, the TxEMT/DSCHG output is low.

SR3, when set, indicates a received parity error when parity is enabled by MR14. In synchronous transparent mode (MR16 = 1), with parity disabled, it indicates that a character matching the DLE Register has been received. However, only the first DLE of two successive DLEs will set SR3. This bit is cleared when the receiver is disabled and by the Reset Error command, CR4.

The Overrun Error status bit, SR4, indicates that the previous character loaded into the Receive Holding Register was not read by the CPU at the time a new received character was transferred into it. This bit is cleared when the receiver is disabled and by the Reset Error command, CR4.

In asynchronous mode, bit SR5 signifies that the received character was not framed by the programmed number of stop bits. (If 1.5 stop bits are programmed, only the first stop bit is checked.) If RHR = 0 when SR5 = 1 a break condition is present. In synchronous non-transparent mode (MR16 = 0), it indicates receipt of the SYN1 character is single SYN mode or the SYN1-SYN2 pair in double SYN mode. In synchronous transparent mode (MR16 = 1), this bit is set upon detection of the initial synchronizing characters (SYN1 or SYN1-SYN2) and, after synchronization has been achieved, when a DLE-SYN1 pair is received. The bit is reset when the receiver is disabled, when the Reset Error command is given in asynchronous mode, and when the Status Register is read by the CPU in the synchronous mode.

SR6 and SR7 reflect the conditions of the $\overline{DCD}$ and $\overline{DSR}$ inputs respectively. A low input sets its corresponding status bit and a high input clears it.

DC ELECTRICAL CHARACTERISTICS[4,5,6]

PARAMETER		TEST CONDITIONS	LIMITS			UNIT
			Min	Typ	Max	
	Input voltage					V
V_{IL}	Low				0.8	
V_{IH}	High		2.0			
	Output voltage					V
V_{OL}	Low	I_{OL} = 1.6mA			0.4	
V_{OH}	High	I_{OH} = -100μA	2.4			
I_{IL}	Input leakage current	V_{IN} = 0 to 5.25V	-10		10	μA
Tristate	Output leakage current					μA
I_{LH}	Data bus high	V_O = 4.0V	-10		10	
I_{LL}	Data bus low	V_O = 0.45V	-10		10	
I_{CC}	Power supply current				150	mA

ABSOLUTE MAXIMUM RATINGS[1]

PARAMETER	RATING	UNIT
Operating ambient temperature[2]	Note 4	°C
Storage temperature	−65 to +150	°C
All voltages with respect to ground[3]	−0.5 to +6.0	V

AC ELECTRICAL CHARACTERISTICS[4,5,6]

	PARAMETER	TEST CONDITIONS	LIMITS			UNIT
			Min	Typ	Max	
	Pulse width					ns
t_{RES}	Reset		1000			
t_{CE}	Chip enable		300			
	Setup and hold time					ns
t_{AS}	Address setup		20			
t_{AH}	Address hold		20			
t_{CS}	$\overline{R}$/W control setup		20			
t_{CH}	$\overline{R}$/W control hold		20			
t_{DS}	Data setup for write		225			
t_{DH}	Data hold for write		0			
t_{RXS}	Rx data setup		300			
t_{RXH}	Rx data hold		350			
t_{DD}	Data delay time for read	C_L = 100pF			250	ns
t_{DF}	Data bus floating time for read	C_L = 100pF			150	ns
t_{CED}	$\overline{CE}$ to $\overline{CE}$ delay		700			ns
	Input clock frequency					MHz
f_{BRG}	Baud rate generator		1.0	5.0688	5.0738	
$f_{R/T}$[10]	$\overline{TxC}$ or $\overline{RxC}$		dc		1.0	
	Clock width					ns
t_{BRH}[9]	Baud rate high		70			
t_{BRL}[9]	Baud rate low		70			
$t_{R/TH}$	$\overline{TxC}$ or $\overline{RxC}$ high		500			
$t_{R/TL}$[10]	$\overline{TxC}$ or $\overline{RxC}$ low		500			
t_{TXD}	TxD delay from falling edge of $\overline{TxC}$	C_L = 100pF			650	ns
t_{TCS}	Skew between TxD changing and falling edge of $\overline{TxC}$ output[8]	C_L = 100pF		0		ns

NOTES

1. Stresses above those listed under Absolute Maximum Ratings may cause permanent damage to the device. This is a stress rating only and functional operation of the device at these or at any other condition above those indicated in the operation section of this specification is not implied.
2. For operating at elevated temperatures, the device must be derated based on +150°C maximum junction temperature.
3. This product includes circuitry specifically designed for the protection of its internal devices from the damaging effects of excessive static charge. Nonetheless, it is suggested that conventional precautions be taken to avoid applying any voltages larger than the rated maxima.
4. Parameters are valid over operating temperature range unless otherwise specified. See ordering code table for applicable temperature range and operating supply range.
5. All voltage measurements are referenced to ground. All time measurements are at the 50% level for inputs (except t_{BRH} and T_{BRL}) and at 0.8V and 2.0V for outputs. Input levels for testing are 0.45V and 2.4V.
6. Typical values are at +25°C, typical supply voltages and typical processing parameters.
7. TxRDY, RxRDY and TxEMT/DSCHG outputs are open drain.
8. Parameter applies when internal transmitter clock is used.
9. Under test conditions of 5.0688MHz t_{BRG}, t_{BRH} and t_{BRL} measured at V_{IH} and V_{IL} respectively.
10. $t_{R/T}$ and $t_{R/TL}$ shown for all modes except local loopback. For local loopback mode $f_{R/T}$ = 0.7MHz and $t_{R/TL}$ = 700ns min.

CAPACITANCE $T_A = 25°C$, $V_{CC} = 0V$

PARAMETER		TEST CONDITIONS	LIMITS			UNIT
			Min	Typ	Max	
	Capacitance					pF
C_{IN}	Input	fc = 1MHz			20	
C_{OUT}	Output	Unmeasured pins tied to ground			20	
$C_{I/O}$	Input/Output				20	

TIMING DIAGRAMS

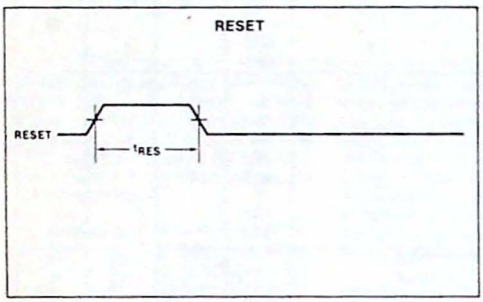

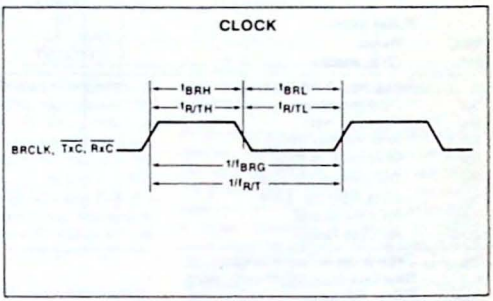

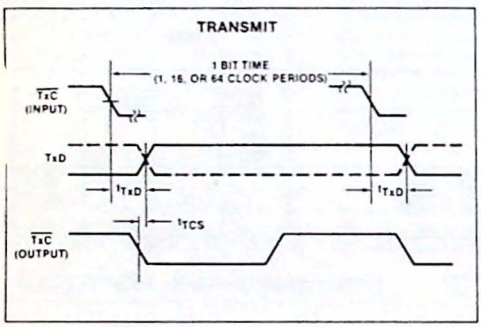

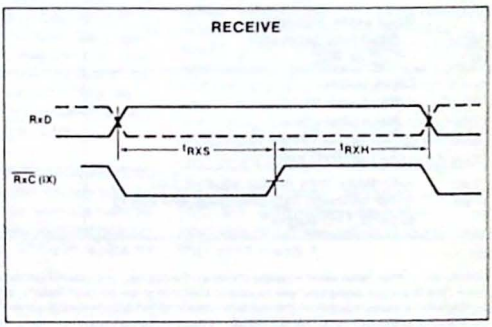

TIMING DIAGRAMS (Cont'd)

TxRDY, TxEMT (Shown for 5-bit characters, no parity, 2 stop bits (in asynchronous mode))

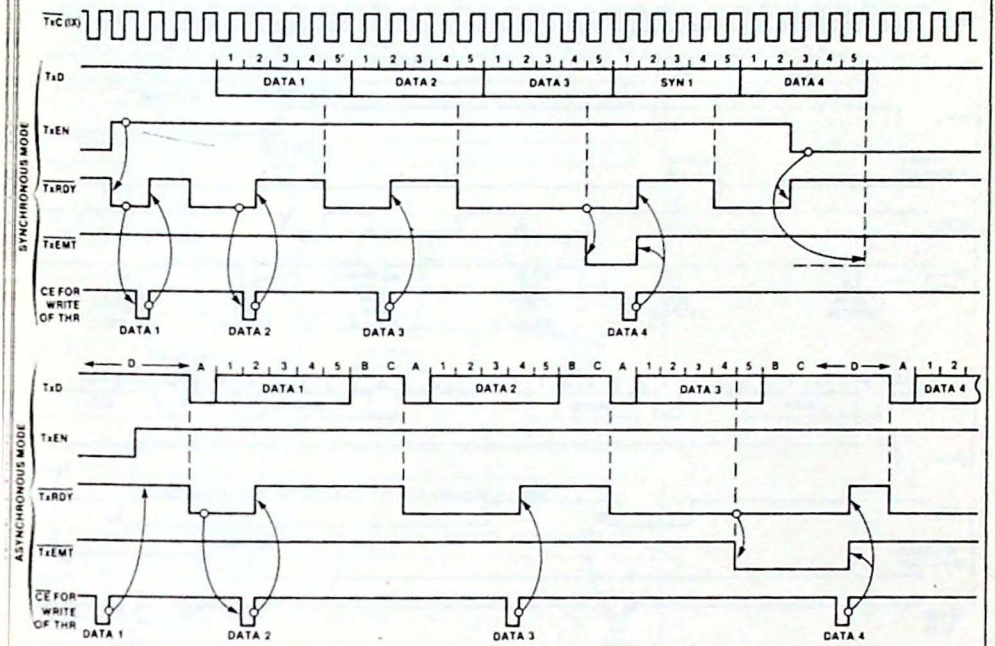

NOTES

A = Start bit
B = Stop bit 1
C = Stop bit 2
D = TxD marking condition

TxEMT goes low at the beginning of the last data bit, or, if parity is enabled, at the beginning of the parity bit.

READ AND WRITE

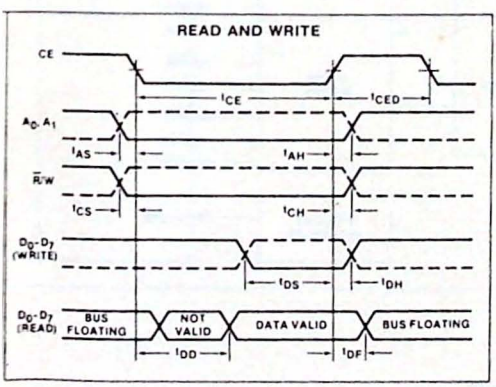

TIMING DIAGRAMS (Cont'd)

RxRDY (Shown for 5-bit characters, no parity, 2 stop bits (in asynchronous mode))

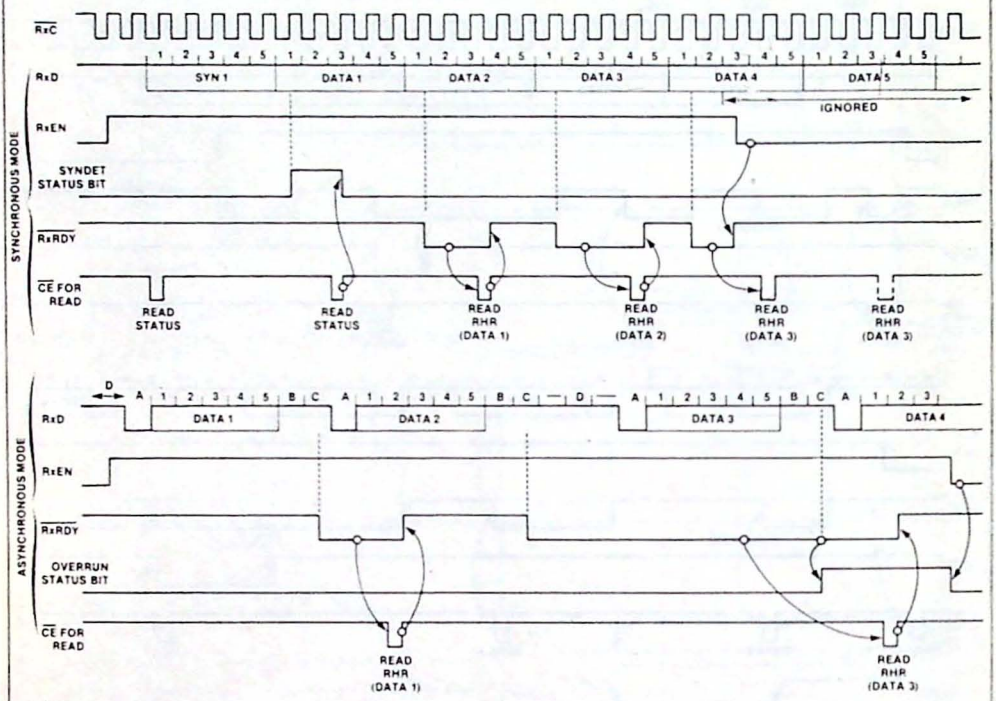

NOTES

A = Start bit
B = Stop bit 1
C = Stop bit 2
D = TxD marking condition

TYPICAL APPLICATIONS

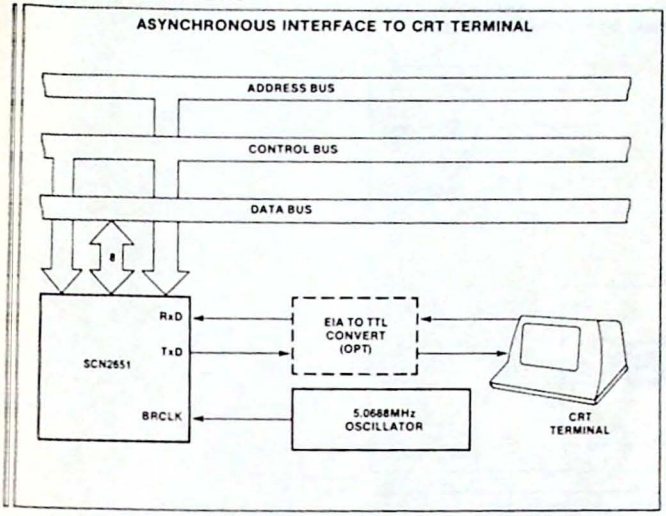

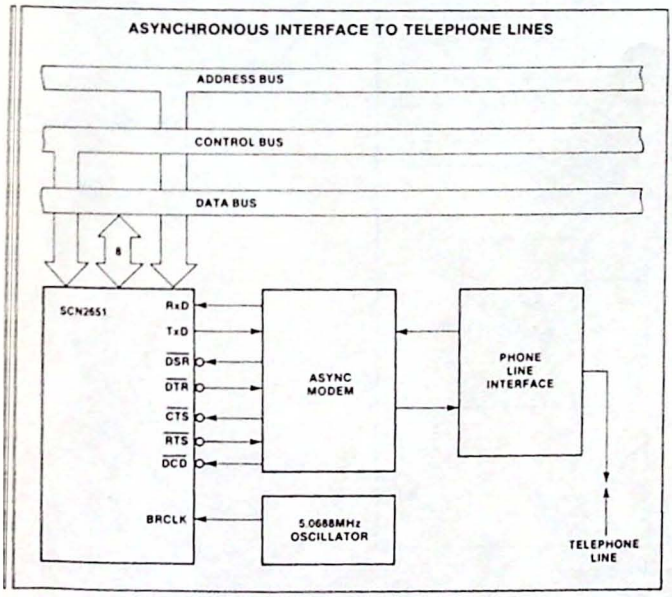

TYPICAL APPLICATIONS (Cont'd)

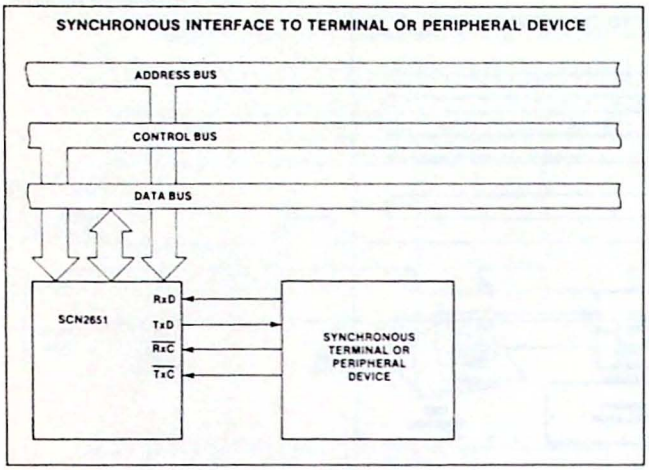

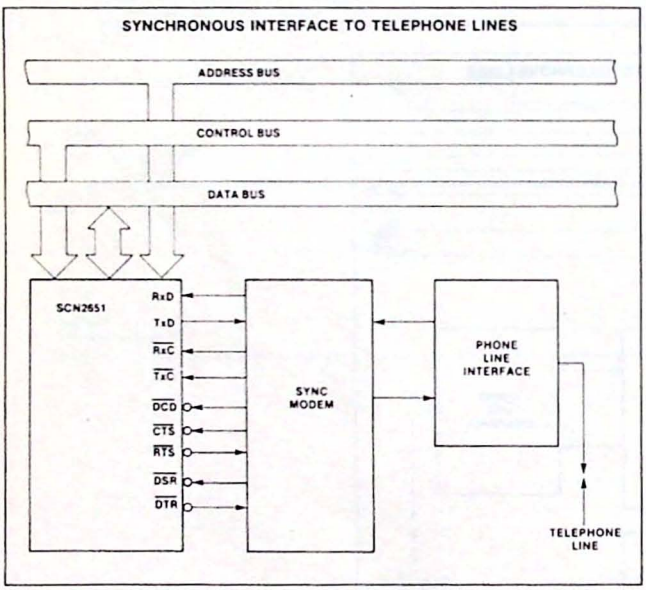

Manufacturer reserves the right to make design and process changes and improvements.

MULTI-PROTOCOL COMMUNICATIONS CONTROLLER SCN2652/SCN68652

DESCRIPTION

The SCN2652/68652 Multi-Protocol Communications Controller (MPCC) is a monolithic multichannel MOS LSI circuit that formats, transmits and receives synchronous serial data while supporting bit-oriented or byte control protocols. The chip is TTL compatible, operates from a single +5V supply, and can interface to a processor with an 8 or 16-bit bidirectional data bus.

FEATURES

- DC to 1Mbps or 2Mbps data rate
- Bit-oriented protocols (BOP): SDLC, ADCCP, HDLC
- Byte-control protocols (BCP): DDCMP, BiSYNC (external CRC)
- Programmable operation
  - 8 or 16-bit tri-state data bus
  - Error control—CRC or VRC or none
  - Character length—1 to 8 bits for BOP or 5 to 8 bits for BCP
  - SYNC or secondary station address comparison for BCP-BOP
  - Idle transmission of SYNC/FLAG or MARK for BCP-BOP
- Automatic detection and generation of special BOP control sequences, i.e., FLAG, ABORT, GA
- Zero insertion and deletion for BOP
- Short character detection for last BOP data character
- SYNC generation, detection, and stripping for BCP
- Maintenance Mode for self-testing
- TTL compatible
- Single +5V supply

APPLICATIONS

- Intelligent terminals
- Line controllers
- Network processors
- Front end communications
- Remote data concentrators
- Communication test equipment
- Computer to computer links

PIN CONFIGURATION

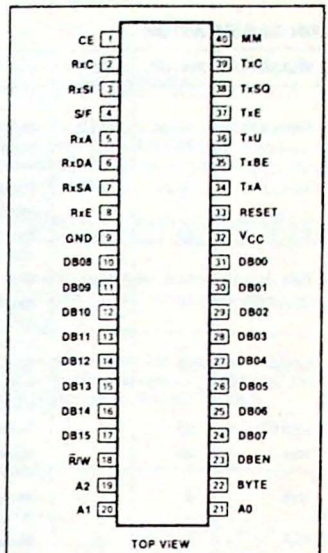

NOTE
00 is least significant bit, highest number (that is, DB15, A2) is most significant bit

ORDERING CODE

PACKAGES		$V_{CC} = 5V \pm 5\%$		
		COMMERCIAL	AUTOMOTIVE	MILITARY
		0°C to +70°C	−40°C to +85°C	−55°C to +125°C
Ceramic DIP	1MHz	SCN2652AC1140	SCN2652AA1140	SCN2652AM1140
	2MHz	SCN2652AC2140	SCN2652AA2140	SCN2652AM2140
Plastic DIP	1MHz	SCN2652AC1N40	Contact Factory	Not Available
	2MHz	SCN2652AC2N40	Contact Factory	Not Available

NOTE: SCN68652 is identical to SCN2652. Order using part numbers shown above.

BLOCK DIAGRAM

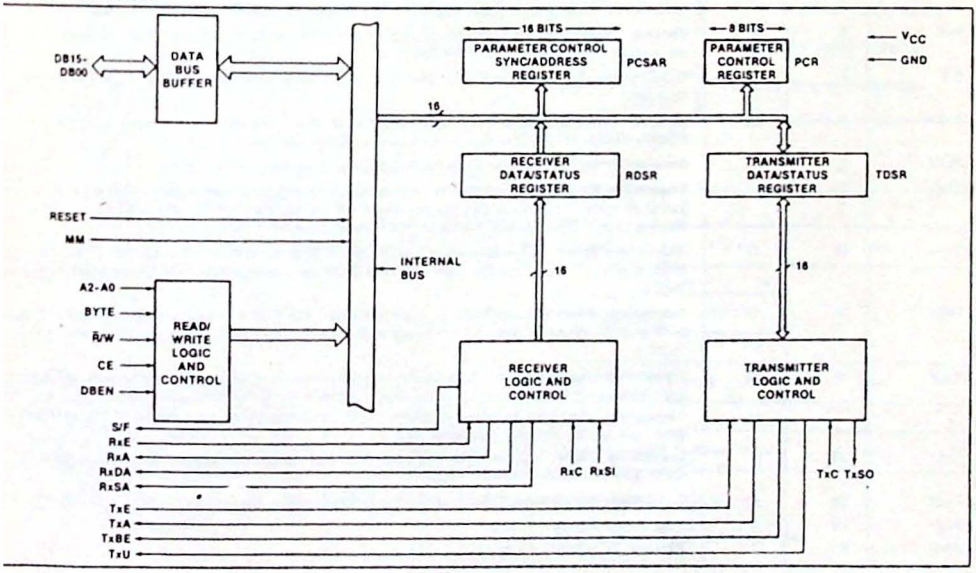

PIN DESIGNATION

MNEMONIC	PIN NO.	TYPE	NAME AND FUNCTION
DB15-DB00	17-10 24-31	I/O	**Data Bus:** DB07-DB00 contain bidirectional data while DB15-DB08 contain control and status information to or from the processor. Corresponding bits of the high and low order bytes can be WIRE OR'ed onto an 8-bit bus. The data bus is floating if either CE or DBEN are low.
A2-A0	19-21	I	**Address Bus:** A2-A0 select internal registers. The four 16-bit registers can be addressed on a word or byte basis. See Register Address section.
BYTE	22	I	**Byte:** Single byte (8 bit) data bus transfers are specified when this input is high. A low level specifies 16 bit data bus transfers.
CE	1	I	**Chip Enable:** A high input permits a data bus operation when DBEN is activated.
$\overline{R}$/W	18	I	**Read/Write:** $\overline{R}$/W controls the direction of data bus transfer. When high, the data is to be loaded into the addressed register. A low input causes the contents of the addressed register to be presented on the data bus.
DBEN	23	I	**Data Bus Enable:** After A2-A0, CE, BYTE and $\overline{R}$/W are set up, DBEN may be strobed. During a read, the 3-state data bus (DB) is enabled with information for the processor. During a write, the stable data is loaded into the addressed register and TxBE will be reset if TDSR was addressed.
RESET	33	I	**Reset:** A high level initializes all internal registers (to zero) and timing.
MM	40	I	**Maintenance Mode:** MM internally gates TxSO back to RxSI and $\overline{TxC}$ to RxC for off line diagnostic purposes. The RxC and RxSI inputs are disabled and TxSO is high when MM is asserted.
RxE	8	I	**Receiver Enable:** A high level input permits the processing of RxSI data. A low level disables the receiver logic and initializes all receiver registers and timing.
RxA	5	O	**Receiver Active:** RxA is asserted when the first data character of a message is ready for the processor. In the BOP mode this character is the address. The received address must match the secondary station address if the MPCC is a secondary station. In BCP mode, if strip-SYNC ($PCSAR_{13}$) is set, the first non-SYNC character is the first data character; if strip-SYNC is zero, the character following the second SYNC is the first data character. In the BOP mode, the closing FLAG resets RxA. In the BCP mode, RxA is reset by a low level at RxE.
RxDA*	6	O	**Receiver Data Available:** RxDA is asserted when an assembled character is in $RDSR_L$ and is ready to be presented to the processor. This output is reset when $RDSR_L$ is read.
RxC	2	I	**Receiver Clock:** RxC (1X) provides timing for the receiver logic. The positive going edge shifts serial data into the RxSR from RxSI.
S/F	4	O	**SYNC/FLAG:** S/F is asserted for one RxC clock time when a SYNC or FLAG character is detected.
RxSA*	7	O	**Receiver Status Available:** RxSA is asserted when there is a zero to one transition of any bit in $RDSR_H$ except for RSOM. It is cleared when $RDSR_H$ is read.
RxSI	3	I	**Receiver Serial Input:** RxSI is the received serial data. Mark = '1', space = '0'.
TxE	37	I	**Transmitter Enable:** A high level input enables the transmitter data path between $TDSR_L$ and TxSO. At the end of a message, a low level input causes TxSO = 1 (mark) and TxA = 0 after the closing FLAG (BOP) or last character (BCP) is output on TxSO.
TxA	34	O	**Transmitter Active:** TxA is asserted after TSOM ($TDSR_8$) is set and TxE is raised. This output will reset when TxE is low and the closing FLAG (BOP) or last character (BCP) has been output on TxSO.
TxBE*	35	O	**Transmitter Buffer Empty:** TxBE is asserted when the TDSR is ready to be loaded with new control information or data. The processor should respond by loading the TDSR which resets TxBE.
TxU*	36	O	**Transmitter Underrun:** TxU is asserted during a transmit sequence when the service of TxBE has been delayed for one character time. This indicates the processor is not keeping up with the transmitter. Line fill depends on $PCSAR_{11}$. TxU is reset by RESET or setting of TSOM ($TDSR_8$), synchronized by the falling edge of TxC.
TxC	39	I	**Transmitter Clock:** TxC (1X) provides timing for the transmitter logic. The positive going edge shifts data out of the TxSR to TxSO.
TxSO	38	O	**Transmitter Serial Output.** TxSO is the transmitted serial data. Mark = '1', space = '0'.
Vcc	32	I	**+5V:** Power supply.
GND	9	I	**Ground:** 0V reference ground.

*Indicates possible interrupt signal

Table 1 GLOSSARY

REGISTERS		NO. OF BITS	DESCRIPTION*
Addressable			
PCSAR	Parameter Control Sync/Address Register	16	$PCSAR_H$ and PCR contain parameters common to the receiver and transmitter. $PCSAR_L$ contains a programmable SYNC character (BCP) or secondary station address (BOP).
PCR	Parameter Control Register	8	
RDSR	Receive Data/Status Register	16	$RDSR_H$ contains receiver status information. $RDSR_L$ = RxDB contains the received assembled character.
TDSR	Transmit Data/Status Register	16	$TDSR_H$ contains transmitter command and status information. TDSRL = TxDB contains the character to be transmitted.
Internal			
CCSR	Control Character Shift Register	8	These registers are used for character assembly (CCSR, HSR, RxSR), disassembly (TxSR), and CRC accumulation/generation (RxCRC, TxCRC).
HSR	Holding Shift Register	16	
RxSR	Receiver Shift Register	8	
TxSR	Transmitter Shift Register	8	
RxCRC	Receiver CRC Accumulation Register	16	
TxCRC	Transmitter CRC Generation Register	16	

NOTE
*H = High byte - bits 15-8
L = Low byte - bits 7-0

Table 2 ERROR CONTROL

CHARACTER	DESCRIPTION
FCCS	Frame Check Sequence is transmitted/received as 16 bits following the last data character of a BOP message. The divisor is usually CRC-CCITT ($X^{16} + X^{12} + X^5 + 1$) with dividend preset to 1's but can be otherwise determined by ECM. The inverted remainder is transmitted as the FCS.
BCCC	Block Check Character is transmitted/received as two successive characters following the last data character of a BCP message. The polynomial is CRC-16 ($X^{16} + X^{15} + X^2 + 1$) or CRC-CCITT with dividend preset to 0's (as specified by ECM). The true remainder is transmitted as the BCC.

Table 3 SPECIAL CHARACTERS

OPERATION	BIT PATTERN	FUNCTION
BOP		
FLAG	01111110	Frame message
ABORT	11111111 generation 01111111 detection	Terminate communication
GA	01111111	Terminate loop mode repeater function
Address	($PCSAR_L$)[1]	Secondary station address
BCP		
SYNC	($PCSAR_L$) or (TxDB)[2] generation	Character synchronization

NOTES
1. ( ) refers to contents of
2. For IDLE = 0 or 1 respectively

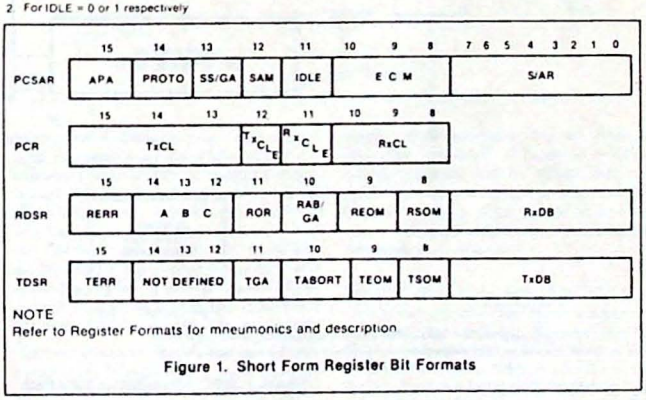

NOTE
Refer to Register Formats for mneumonics and description

Figure 1. Short Form Register Bit Formats

FUNCTIONAL DESCRIPTION

The MPCC can be functionally partitioned into receiver logic, transmitter logic, registers that can be read or loaded by the processor, and data bus control circuitry. The register bit formats are shown in figure 1 while the receiver and transmitter data paths are depicted in figures 2 and 3.

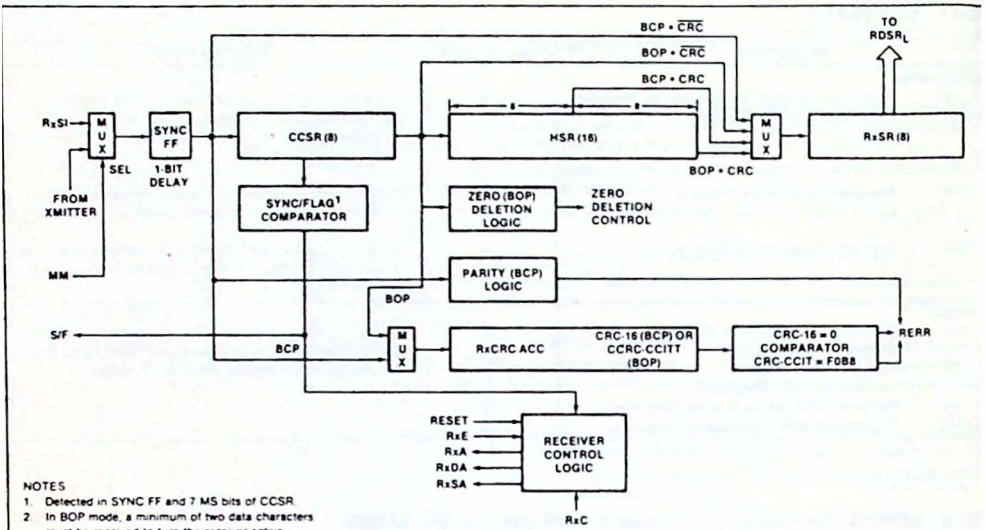

NOTES
1. Detected in SYNC FF and 7 MS bits of CCSR.
2. In BOP mode, a minimum of two data characters must be received to turn the receiver active.

Figure 2. MPCC Receiver Data Path

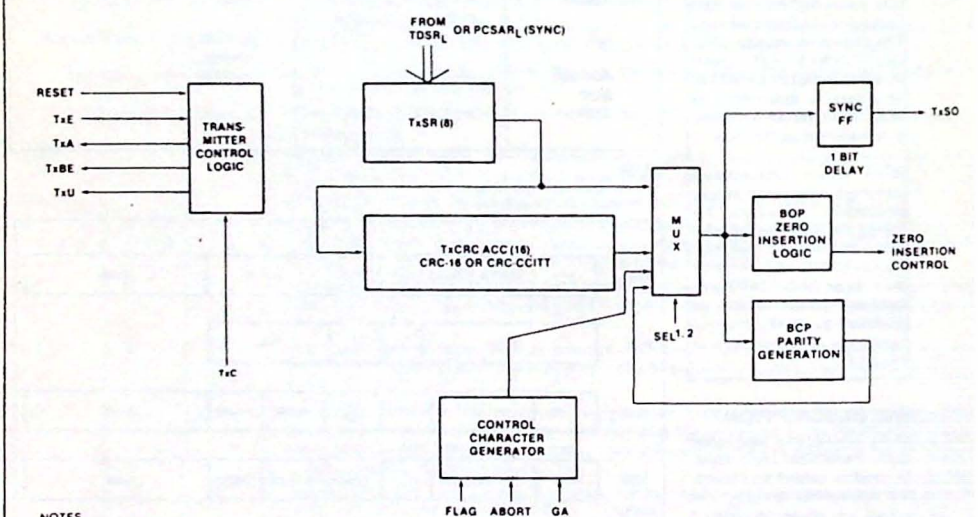

NOTES
1 TxCRC selected if TEOM = 1 and the last data character has been shifted out of TxSR
2 In BCP, parity selected will be generated after each character is shifted out of TxSR

Figure 3. MPCC Transmitter Data Path

RECEIVER OPERATION

General

After initializing the parameter control registers (PCSAR and PCR), the RxE input must be set high to enable the receiver data path. The serial data on the RxSI is synchronized and shifted into an 8-bit Control Character Shift Register (CCSR) on the rising edge of RxC. A comparison between CCSR contents and the FLAG (BOP) or SYNC (BCP) character is made until a match is found. At that time, the S/F output is asserted for one RxC time and the 16-bit Holding Shift Register (HSR) is enabled. The receiver then operates as described below.

BOP Operation

A flow chart of receiver operation in BOP mode appears in figure 4. Zero deletion (after five ones are received) is implemented on the received serial data so that a data character will not be interpreted as a FLAG, ABORT, or GA. Bits following the FLAG are shifted through the CCSR, HSR, and into the Receiver Shift Register (RxSR). A character will be assembled in the RxSR and transferred to the $RDSR_L$ for presentation to the processor. At that time the RxDA output will be asserted and the processor must take the character no later than one RxC time after the next character is assembled in the RxSR. If not, an overrun ($RDSR_{11} = 1$) will occur and succeeding characters will be lost.

The first character following the FLAG is the secondary station address. If the MPCC is a secondary station ($PCSAR_{12} = 1$), the contents of RxSR are compared with the address stored in $PCSAR_L$. A match indicates the forthcoming message is intended for the station; the RxA output is asserted, the character is loaded into $RDSR_L$, RxDA is asserted and the Receive Start of Message bit (RSOM) is set. No match indicates that another station is being addressed and the receiver searches for the next FLAG.

If the MPCC is a primary station ($PCSAR_{12} = 0$), no secondary address check is made; RxA is asserted and RSOM is set once the first non-FLAG character has been loaded into $RDSR_L$ and RxDA has been asserted. Extended address field can be supported by software if $PCSAR_{12} = 0$.

When the 8 bits following the address character have been loaded into $RDSR_L$ and RxDA has been asserted, RSOM will be cleared. The processor should read this 8-bit character and interpret it as the Control field.

Received serial data that follows is read and interpreted as the Information field by the processor. It will be assembled into character lengths as specified by PCR_{8-10}. As

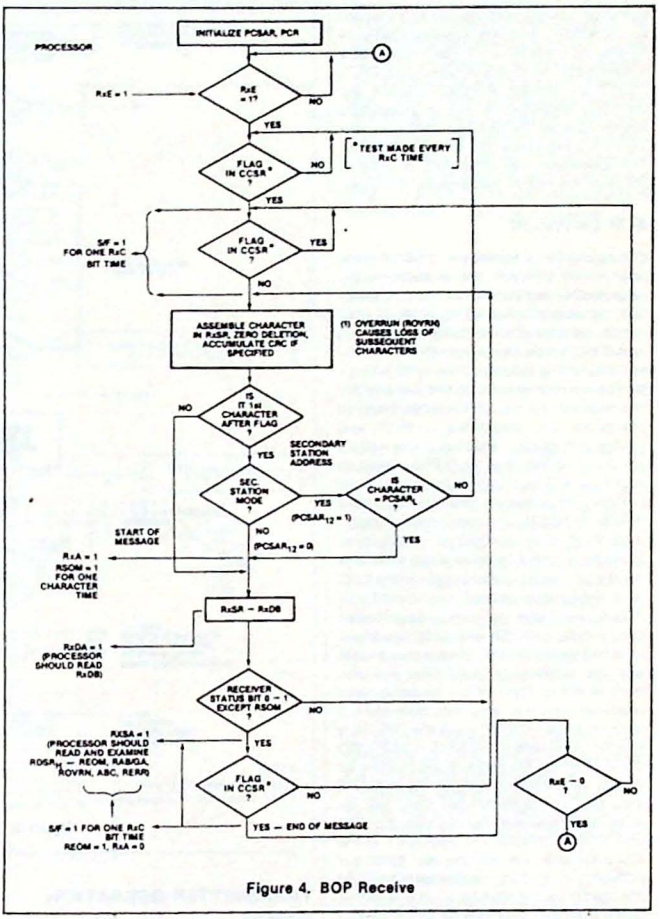

Figure 4. BOP Receive

before, RxDA is asserted each time a character has been transferred into $RDSR_L$ and is cleared when $RDSR_L$ is read by the processor. $RDSR_H$ should only be read when RxSA is asserted. This occurs on a zero to one transition of any bit in $RDSR_H$ except for RSOM. RxSA and all bits in $RDSR_H$ except RSOM are cleared when $RDSR_H$ is read. The processor should check $RDSR_{9-15}$ each time RxSA is asserted. If $RDSR_9$ is set, then $RDSR_{12-15}$ should be examined.

Receiver character length may be changed dynamically in response to RxDA: read the character in RxDB and write the new character length into RxCL. The character length will be changed on the next receiver character boundary. A received residual (short) character will be transferred into RxDB after the previous character in RxDB has been read, i.e. there will not be an overrun. In general the last two characters are protected from overrun.

The CRC-CCITT, if specified by $PCSAR_{8-10}$, is accumulated in RxCRC on each character following the FLAG. When the closing FLAG is detected in the CCSR, the received CRC is in the 16-bit HSR. At that time, the Receive End of Message bit (REOM) will be set, RxSA and RxDA will be asserted. The

processor should read the last data character in $RDSR_L$ and the receiver status in $RDSR_{9-15}$. If $RDSR_{15} = 1$, there has been a transmission error; the accumulated CRC-CCITT is incorrect. If $RDSR_{12-14} \neq 0$, the last data character is not of prescribed length. Neither the received CRC nor closing FLAG are presented to the processor. The processor may drop RxE or leave it active at the end of the received message.

BCP Operation

The operation of the receiver in BCP mode is shown in figure 5. The receiver initially searches for two successive SYNC characters, of length specified by PCR_{8-10}, that match the contents of PCSARL. The next non-SYNC character or next SYNC character, if stripping is not specified ($PCSAR_{13} = 0$), causes RxA to be asserted and enables the receiver data path. Once enabled, all characters are assembled in RxSR and loaded into $RDSR_L$. RxDA is active when a character is available in $RDSR_L$. RxSA is active on a 0 to 1 transition of any bit in $RDSR_H$. The signals are cleared when $RDSR_L$ or $RDSR_H$ are read respectively.

If CRC-16 error control is specified by $PCSAR_{8-10}$, the processor must determine the last character received prior to the CRC field. When that character is loaded into $RDSR_L$ and RxDA is asserted, the received CRC will be in CCSR and HSR_L. To check for a transmission error, the processor must read the receiver status ($RDSR_H$) and examine $RDSR_{15}$. This bit will be set for one character time if an error free message has been received. If $RDSR_{15} = 0$, the CRC-16 is in error. The state of RDSR15 in BCP CRC mode does not set RxSA. Note that this bit should be examined only at the end of a message. The accumulated CRC will include all characters starting with the first non-SYNC character if $PCSAR_{13} = 1$, or the character after the opening two SYNC's if $PCSAR_{13} = 0$. This necessitates external CRC generation/checking when supporting IBM's BISYNC. This can be accomplished using the Signetics 2653 Polynomial Generator/Checker. See Typical Applications.

If VRC had been selected for error control, parity (odd or even) is regenerated on each character and checked when the parity bit is received. A discrepancy causes $RDSR_{15}$ to be set and RxSA to be asserted. This must be sensed by the processor. The received parity bit is stripped before the character is presented to the processor.

When the processor has read the last character of the message, it should drop RxE which disables the receiver logic and initializes all receiver registers and timing.

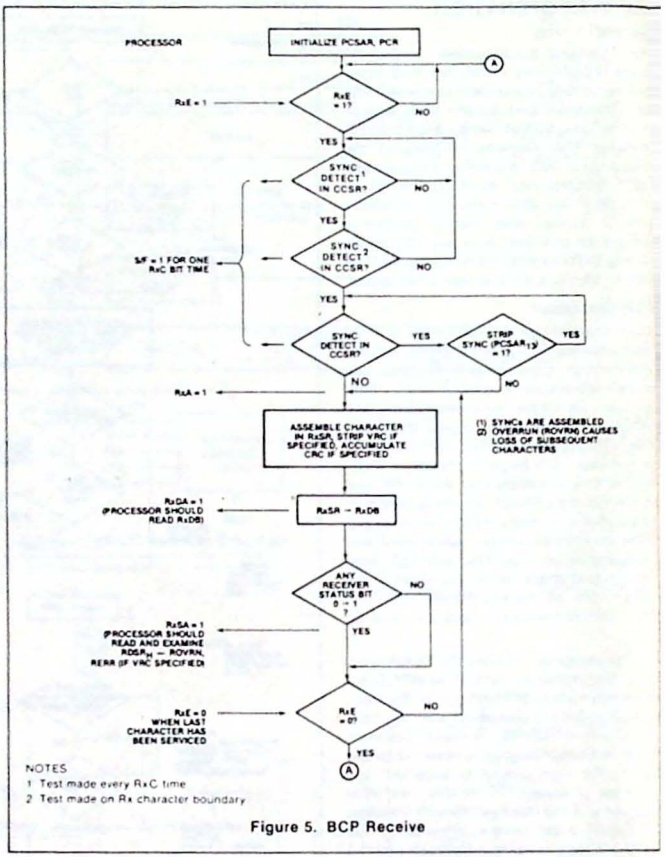

Figure 5. BCP Receive

TRANSMITTER OPERATION

General

After the parameter control registers (PCSAR and PCR) have been initialized, TxSO is held at mark until TSOM ($TDSR_8$) is set and TxE is raised. Then, transmitter operation depends on protocol mode.

BOP Operation

Transmitter operation for BOP is shown in figure 6. A FLAG is sent after the processor sets the Transmit Start of Message bit (TSOM) and raises TxE. The FLAG is used to synchronize the message that follows. TxA will also be asserted. When TxBE is asserted by the MPCC, the processor should load $TDSR_L$ with the first character of the message. TSOM should be cleared at the same time $TDSR_L$ is loaded (16-bit data bus) or immediately thereafter (8-bit data bus). FLAGs are sent as long as TSOM = 1. For counting the number of FLAGs, the processor should reassert TSOM in response to the assertion of TxBE.

All succeeding characters are loaded into $TDSR_L$ by the processor when TxBE = 1. Each character is serialized in TxSR and transmitted on TxSO. Internal zero insertion logic stuffs a "0" into the serial bit stream after five successive "1s" are sent. This insures a data character will not match a FLAG, ABORT, or GA reserved control character. As each character is transmitted, the Frame Check Sequence (FCS) is gener-

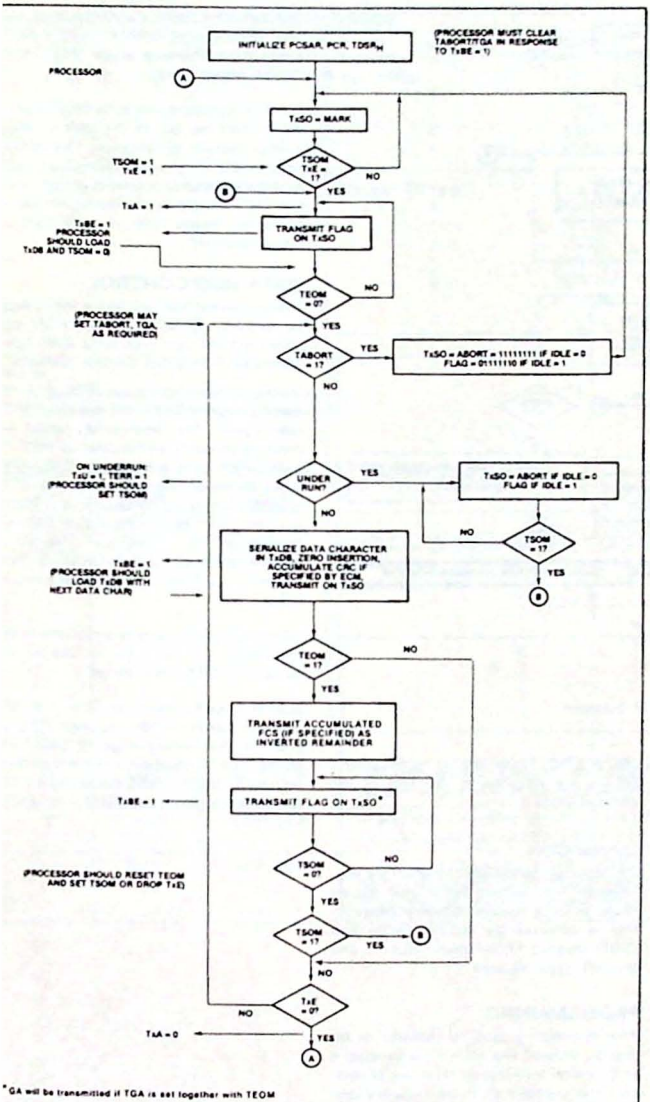

Figure 6. BOP Transmit

ated as specified by Error Control Mode ($PCSAR_{8-10}$). The FCS should be the CRC-CCITT polynomial ($X^{16} + X^{12} + X^5 + 1$) preset to 1s. If an underrun occurs (processor is not keeping up with the transmitter), TxU and TERR ($TDSR_{15}$) will be asserted with ABORT or FLAG used as the TxSO line fill depending on the state of IDLE ($PCSAR_{11}$). The processor must set TSOM to reset the underrun condition. To retransmit the message, the processor should proceed with the normal start of message sequence.

A residual character of 1 to 7 bits may be transmitted at the end of the Information field. In response to TxBE, write the residual character length into TxCL and load TxDB with the residual character. Dynamic alteration of character length should be done in exactly the same sequence. The character length will be changed on the next transmit character boundary.

After the last data character has been loaded into $TDSR_L$ and sent to TxSR (TxBE = 1), the processor should set TEOM ($TDSR_9$). The MPCC will finish transmitting the last character followed by the FCS and the closing FLAG. The processor should clear TEOM and drop TxE when the next TxBE is asserted. This corresponds to the start of closing FLAG transmission. When TxE has been dropped, TxA will be low $1\frac{1}{2}$ bit times after the last bit of the closing FLAG has been transmitted. TxSO will be marked after the closing FLAG has been transmitted.

If TxE and TEOM are high, the transmitter continues to send FLAGs. The processor may initiate the next message by resetting TEOM and setting TSOM, or by loading $TDSR_L$ with a data character and then simply resetting TEOM (without setting TSOM).

BCP Operation

Transmitter operation for BCP mode is shown in figure 7. TxA will be asserted after TSOM = 1 and TxE is raised. At that time SYNC characters are sent from $PCSAR_L$ or $TDSR_L$ (IDLE = 0 or 1) as long as TSOM = 1. TxBE is asserted at the start of transmission of the first SYNC character. For counting the number of SYNC's, the processor should reassert TSOM in response to the assertion of TxBE. When TSOM = 0 transmission is from $TDSR_L$, which must be loaded with characters from the processor each time TxBE is asserted. If this loading is delayed for more than one character time, an underrun results: TxU and TERR are asserted and the TxSO line fill depend on IDLE ($PCSAR_{11}$). The processor must set TSOM

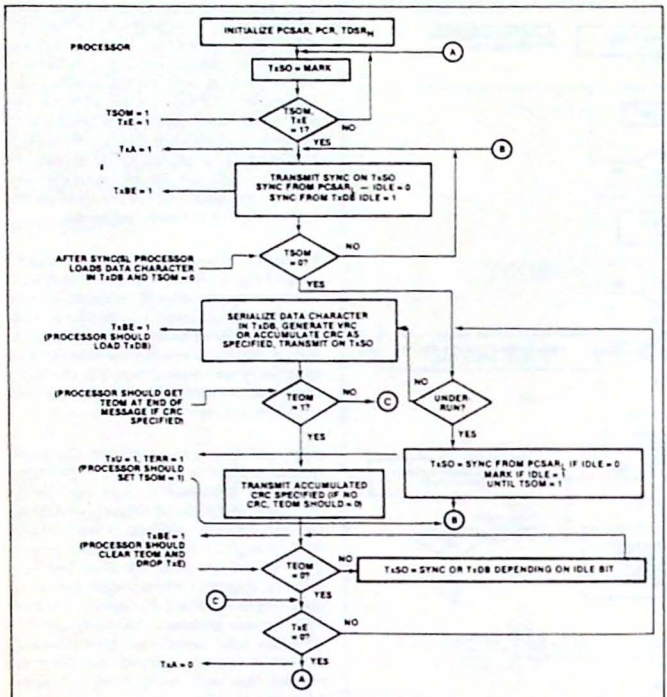

Figure 7. BCP Transmit

and retransmit the message to recover. This is not compatible with IBM's BISYNC, so that the user must not underrun when supporting that protocol.

CRC-16, if specified by $PCSAR_{8-10}$, is generated on each character transmitted from $TDSR_L$ when TSOM = 0. The processor must set TEOM = 1 after the last data character has been sent to TxSR (TxBE = 1). The MPCC will finish transmitting the last data character and the CRC-16 field before sending SYNC characters which are transmitted as long as TEOM = 1. If SYNCs are not desired after CRC-16 transmission, the processor should clear TEOM and lower TxE when the TxBE corresponding to the start of CRC-16 transmission is asserted. When TEOM = 0, the line is marked and a new message may be iniated by setting TSOM and raising TxE.

If VRC is specified, it is generated on each data character and the data character length must not exceed 7 bits. For software LRC or CRC, TEOM should be set only if SYNC's are required at the end of the message block.

Special Case

The capability to transmit 16 spaces is provided for line turnaround in half duplex mode or for a control recovery situation. This is achieved by setting TSOM and TEOM, clearing TEOM when TxBE = 1, and proceeding as required.

PROGRAMMING

Prior to initiating data transmission or reception, PCSAR and PCR must be loaded with control information from the processor. The contents of these registers (see Register Format section) will configure the MPCC for the user's specific data communication environment. These registers should be loaded during power-on initialization and after a reset operation. They can be changed at any time that the respective transmitter or receiver is disabled.

The default value for all registers is zero. This corresponds to BOP, primary static mode, 8-bit character length, FCS = CRC CCITT preset to 1s.

For BOP mode the character length registe (PCR) may be set to the desired value during system initialization. The addres and control fields will automatically be 8 bits. If a residual character is to be transmit ted, TxCL should be changed to the residua character length prior to transmission o that character.

DATA BUS CONTROL

The processor must set up the MPCC regis ter address (A2-A0), chip enable (CE), byt select (BYTE), and read/write ($\overline{R}$/W) input before each data bus transfer operation.

During a read operation ($\overline{R}$/W = 0), th leading edge of DBEN will initiate an MPC read cycle. The addressed register wi place its contents on the data bus. If BYTE 1, the 8-bit byte is placed on DB15-08 o DB07-00 depending on the H/L status of th register addressed. Unused bits in RDSR are zero. If BYTE = 0, all 16 bits (DB15-0 contain MPCC information. The trailin edge of DBEN will reset RxDA and/or RxS if $RDSR_L$ or $RDSR_H$ is addressed respec tively.

DBEN acts as the enable and strobe so th the MPCC will not begin its internal rea cycle until DBEN is asserted.

During a write operation ($\overline{R}$/W = 1), dat must be stable on DB_{15-08} and/or DB_{07-} prior to the leading edge of DBEN. Th stable data is strobed into the addresse register by DBEN. TxBE will be cleared if th addressed register was $TDSR_H$ or $TDSR_L$

Table 4 MPCC REGISTER ADDRESSING

	A2	A1	A0	REGISTER
BYTE = 0	16-BIT DATA BUS = DB_{15} - DB_{00}			
	0	0	X	RDSR
	0	1	X	TDSR
	1	0	X	PCSAR
	1	1	X	PCR*
BYTE = 1	8-BIT DATA BUS = DB_{7-0} or DB_{15-8}**			
	0	0	0	$RDSR_L$
	0	0	1	$RDSR_H$
	0	1	0	$TDSR_L$
	0	1	1	$TDSR_H$
	1	0	0	$PCSAR_L$
	1	0	1	$PCSAR_H$
	1	1	0	PCR_L*
	1	1	1	PCR_H

NOTES:

* PCR lower byte does not exist. It will be all "0"s when read.

** Corresponding high and low order pins must be tied together.

Table 5 PARAMETER CONTROL REGISTER (PCR)-(R/W)

BIT	NAME	MODE	FUNCTION
00-07	Not Defined		
08-10	RxCL	BOP/BCP	Receiver Character Length is loaded by the processor when RxCLE = 0. The character length is valid after transmission of single byte address and control fields have been received. 10 9 8 — Char. length (bits) 0 0 0 — 8 0 0 1 — 1 0 1 0 — 2 0 1 1 — 3 1 0 0 — 4 1 0 1 — 5 1 1 0 — 6 1 1 1 — 7
11	RxCLE	BOP/BCP	Receiver Character Length Enable should be zero when the processor loads RxCL. The remaining bits of PCR are not affected during loading. Always 0 when read.
12	TxCLE	BOP/BCP	Transmitter Character Length Enable should be zero when the processor loads TxCL. The remaining bits of PCR are not affected during loading. Always 0 when read.
13-15	TxCL	BOP/BCP	Transmitter Character Length is loaded by the processor when TxCLE = 0. Character bit length specification format is identical to RxCL. It is valid after transmission of single byte address and control fields.

Table 6 PARAMETER CONTROL SYNC/ADDRESS REGISTER (PCSAR)-(R/W)

BIT	NAME	MODE	FUNCTION
00-07	S/AR	BOP BCP	SYNC/ADDRESS Register. Contains the secondary station address if the MPCC is a secondary station. The contents of this register is compared with the first received non-FLAG character to determine if the message is meant for this station. SYNC character is loaded into this register by the processor. It is used for receive and transmit bit synchronization with bit length specified by RxCL and TxCL.
08-10	ECM	BOP/BCP	**Error Control Mode** — **10** — **9** — **8** — **Suggested Mode** — **Char. length** CRC-CCITT preset to 1's — 0 — 0 — 0 — BOP — 1-8 CRC-CCITT preset to 0's — 0 — 0 — 1 — BCP — 8 Not used — 0 — 1 — 0 — --- CRC-16 preset to 0's — 0 — 1 — 1 — BCP — 8 VRC odd — 1 — 0 — 0 — BCP — 5-7 VRC even — 1 — 0 — 1 — BCP — 5-7 Not used — 1 — 1 — 0 — --- No error control — 1 — 1 — 1 — BCP/BOP — 5-8 ECM should be loaded by the processor during initialization or when both data paths are idle.
11	IDLE	BOP BCP	Determines line fill character to be used if transmitter underrun occurs (TxU asserted and TERR set) and transmission of special characters for BOP/BCP. IDLE = 0, transmit ABORT characters during underrun and when TABORT = 1. IDLE = 1, transmit FLAG characters during underrun and when TABORT = 1. IDLE = 0 transmit initial SYNC characters and underrun line fill characters from the S/AR. IDLE = 1 transmit initial SYNC characters from TxDB and marks TxSO during underrun.
12	SAM	BOP	Secondary Address Mode = 1 if the MPCC is a secondary station. This facilitates automatic recognition of the received secondary station address. When transmitting, the processor must load the secondary address into TxDB. SAM = 0 inhibits the received secondary address comparison which serves to activate the receiver after the first non-FLAG character has been received.
13	SS/GA	BOP BCP	Strip SYNC/Go Ahead. Operation depends on mode. SS/GA = 1 is used for loop mode only and enables GA detection. When a GA is detected as a closing character, REOM and RAB/GA will be set and the processor should terminate the repeater function. SS/GA = 0 is the normal mode which enables ABORT detection. It causes the receiver to terminate the frame upon detection of an ABORT or FLAG. SS/GA = 1, causes the receiver to strip SYNC's immediately following the first two SYNC's detected. SYNC's in the middle of a message will not be stripped. SS/GA = 0, presents any SYNC's after the initial two SYNC's to the processor.
14	PROTO	BOP BCP	Determines MPCC Protocol mode PROTO = 0 PROTO = 1
15	APA	BOP	All Parties Address. If this bit is set, the receiver data path is enabled by an address field of '11111111' as well as the normal secondary station address.

Table 7 TRANSMIT DATA/STATUS REGISTER (TDSR) (R/W except TDSR 15)

BIT	NAME	MODE	FUNCTION
00-07	TxDB	BOP/BCP	Transmit Data Buffer. Contains processor loaded characters to be serialized in TxSR and transmitted on TxSO.
08	TSOM	BOP BCP	Transmitter Start of Message. Set by the processor to initiate message transmission provided TxE = 1. TSOM = 1 generates FLAGs. When TSOM = 0 transmission is from TxDB and FCS generation (if specified) begins. FCS, as specified by $PCSAR_{8\ 10}$, should be CRC-CCITT preset to 1's. TSOM = 1 generates SYNCs from $PCSAR_L$ or transmits from TxDB for IDLE = 0 or 1 respectively. When TSOM = 0 transmission is from TxDB and CRC generation (if specified) begins.

VALVO

Table 7 TRANSMIT DATA/STATUS REGISTER (TDSR) (R/W except TDSR 15) (Continued)

BIT	NAME	MODE	FUNCTION
09	TEOM		Transmit End of Message. Used to terminate a transmitted message.
		BOP	TEOM = 1 causes the FCS and the closing FLAG to be transmitted following the transmission of the data character in TxSR. FLAGs are transmitted until TEOM = 0. ABORT or GA are transmitted if TABORT or TGA are set when TEOM = 1.
		BCP	TEOM = 1 causes CRC-16 to be transmitted (if selected) followed by SYNCs from $PCSAR_L$ or TxDB (IDLE = 0 or 1). Clearing TEOM prior to the end of CRC-16 transmission (when TxBE = 1) causes TxSO to be marked following the CRC-16. TxE must be dropped before a new message can be initiated. If CRC is not selected, TEOM should not be set.
10	TABORT	BOP	Transmitter Abort = 1 will cause ABORT or FLAG to be sent (IDLE = 0 or 1) after the current character is transmitted. (ABORT = 11111111)
11	TGA	BOP	Transmit Go Ahead (GA) instead of FLAG when TEOM = 1. This facilitates repeater termination in loop mode. (GA = 01111111)
12-14	Not Defined		
15	TERR	Read only	Transmitter Error = 1 indicates the TxDB has not been loaded in time (one character time - 1/2 TxC period after TxBE is asserted) to maintain continuous transmission. TxU will be asserted to inform the processor of this condition. TERR is cleared by setting TSOM. See timing diagram.
		BOP	ABORT's or FLAG's are sent as fill characters (IDLE = 0 or 1)
		BCP	SYNC's or MARK's are sent as fill characters (IDLE = 0 or 1). For IDLE = 1 the last character before underrun is not valid.

Table 8 RECEIVER DATA/STATUS REGISTER (RDSR)-(Read Only)

BIT	NAME	MODE	FUNCTION
00-07	RxDB	BOP/BCP	Receiver Data Buffer. Contains assembled characters from the RxSR. If VRC is specified, the parity bit is stripped.
08	RSOM	BOP	Receiver Start of Message = 1 when a FLAG followed by a non-FLAG has been received and the latter character matches the secondary station address if SAM = 1. RxA will be asserted when RSOM = 1. RSOM resets itself after one character time and has no effect on RxSA.
09	REOM	BOP	Receiver End of Message = 1 when the closing FLAG is detected and the last data character is loaded into RxDB or when an ABORT/GA character is received. REOM is cleared on reading $RDSR_H$, reset operation, or dropping of RxE.
10	RAB/GA	BOP	Received ABORT or GA character = 1 when the receiver senses an ABORT character if SS/GA = 0 or a GA character if SS/GA = 1. RAB/GA is cleared on reading $RDSR_H$, reset operation, or dropping of RxE. A received ABORT does not set RxDA.
11	ROR	BOP/BCP	Receiver Overrun = 1 indicates the processor has not read last character in the RxDB within one character time +1/2 RxC period after RxDA is asserted. Subsequent characters will be lost. ROR is cleared on reading $RDSR_H$, reset operation, or dropping of RxE.
12-14	ABC	BOP	Assembled Bit Count. Specifies the number of bits in the last received data character of a message and should be examined by the processor when REOM = 1 (RxDA and RxSA asserted). ABC = 0 indicates the message was terminated (by a FLAG or GA) on a character boundary as specified by PCR_{8-10}. Otherwise, ABC = number of bits in the last data character. ABC is cleared when $RDSR_H$ is read, reset operation, or dropping RxE. The residual character is right justified in $RDSR_L$.
15	RERR	BOP/BCP	Receiver Error indicator should be examined by the processor when REOM = 1 in BOP, or when the processor determines the last data character of the message in BCP with CRC or when RxSA is set in BCP with VRC. CRC-CCITT preset to 1's/0's as specified by $PCSAR_{8-10}$. RERR = 1 indicates FCS error (CRC ≠ F0B8/ ≠ 0) RERR = 0 indicates FCS received correctly (CRC = F0B / = 0) CRC-16 preset to 0's on 8-bit data characters specified by $PSCAR_{8-10}$. RERR = 1 indicates CRC-16 received correctly (CRC = 0). RERR = 0 indicates CRC-16 error (CRC ≠ 0) VRC specified by $PCSAR_{8-10}$. RERR = 1 indicates VRC error RERR = 0 indicates VRC is correct

ABSOLUTE MAXIMUM RATINGS[1]

PARAMETER		RATING	UNIT
T_A	Operating ambient temperature[2]	Note 4	°C
T_{STG}	Storage temperature	-65 to +150	°C
	Input or output voltages with respect to GND[3]	-0.3 to +15	V
V_{CC}	With respect to GND	-0.3 to +7	V

DC ELECTRICAL CHARACTERISTICS[4,5]

PARAMETER		TEST CONDITIONS	LIMITS			UNIT
			Min	Typ	Max	
	Input voltage					V
V_{IL}	Low				0.8	
V_{IH}	High		2.0			
	Output voltage					V
V_{OL}	Low	I_{OL} = 1.6mA			0.4	
V_{OH}	High	I_{OH} = -100μA	2.4			
I_{CC}	Power supply current	V_{CC} = 5.25V, T_A = 0°C			150	mA
	Leakage current					μA
I_{IL}	Input	V_{IN} = 0 to 5.25V			10	
I_{OL}	Output	V_{OUT} = 0 to 5.25V			10	
	Capacitance					pF
C_{IN}	Input	V_{IN} = 0V, f = 1MHz			20	
C_{OUT}	Output	V_{OUT} = 0V, f = 1MHz			20	

AC ELECTRICAL CHARACTERISTICS[4,5,6]

PARAMETER		1MHz Clock Version			2MHz Clock Version			UNIT
		Min	Typ	Max	Min	Typ	Max	
	Setup and hold time							ns
t_{ACS}	Address/control setup	50			50			
t_{ACH}	Address/control hold	0			0			
t_{DS}	Data bus setup (write)	50			50			
t_{DH}	Data bus hold (write)	0			0			
t_{RXS}	Receiver serial data setup	150			150			
t_{RxH}	Receive serial data hold	150			150			
	Pulse width							ns
t_{RES}	RESET	250			250			
t_{DBEN}	DBEN	250		m[7]	200		m[7]	
	Delay time							ns
t_{DD}	Data bus (read)			200			170	
t_{TxD}	Transmit serial data			325			250	
t_{DBEND}	DBEN to DBEN delay	200			200			
t_{DF}	Data bus float time (read)			150			150	ns
f	Clock (RxC, TxC) frequency			1.0			2.0	MHz
t_{CLK1}	Clock high (MM = 0)	340			165			ns
t_{CLK1}	Clock high (MM = 1)	490			240			
t_{CLK0}	Clock low	490			240			

NOTES

Stresses above those listed under "Absolute Maximum Ratings" may cause permanent damage to the device. This is a stress rating only and functional operation of the device at these or at any other condition above those indicated in the operation sections of this specification is not implied.

For operating at elevated temperatures the device must be derated based on +150°C maximum junction temperature.

This product includes circuitry specifically designed for the protection of its internal devices from the damaging effects of excessive static charge. Nonetheless, it is suggested that conventional precautions be taken to avoid applying any voltages larger than the rated maxima.

4. Parameters are valid over operating temperature range unless otherwise specified. See ordering code table for applicable temperature range and operating supply range.
5. All voltage measurements are referenced to ground. All time measurements are at 0.8V or 2.0V. Input voltage levels for testing are 0.4V and 2.4V.
6. Output load C_L = 100pF.
7. m = 1 xC low and applies to writing to $TDSR_H$ only.

TIMING DIAGRAMS

RESET

READ AND WRITE DATA BUS

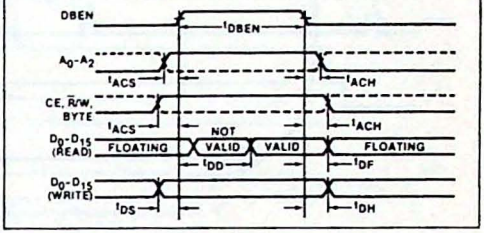

CLOCK

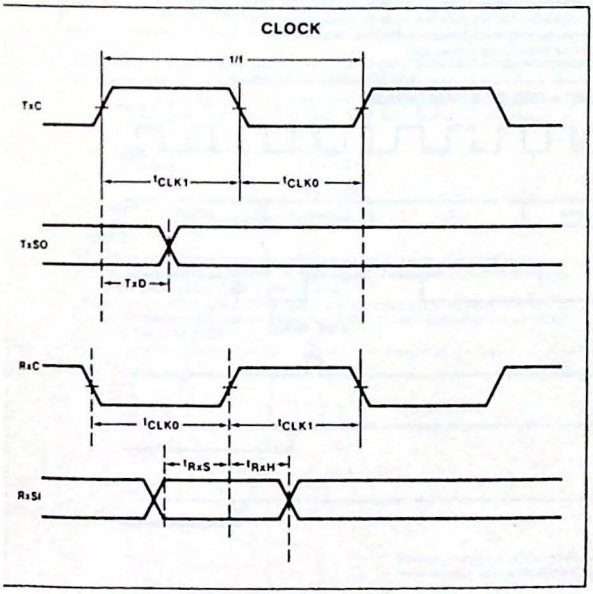

TIMING DIAGRAMS (Cont'd)

TRANSMIT—START OF MESSAGE

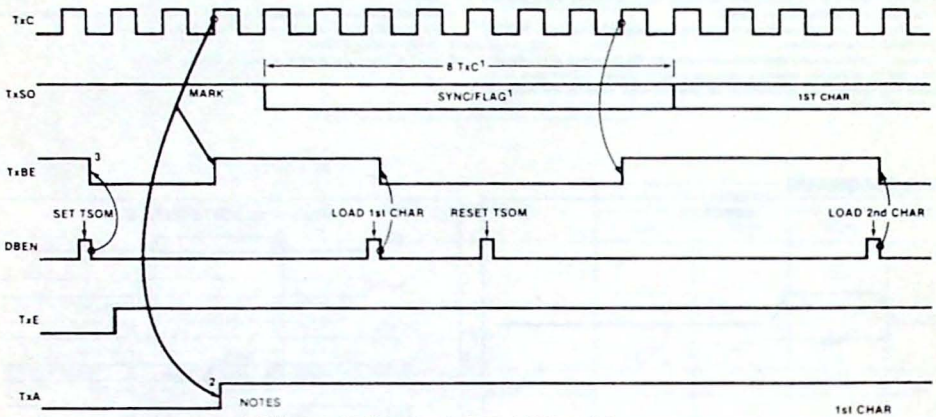

NOTES

1. SYNC may be 5 to 8 bits and will contain parity bit as specified.
2. TxA goes high relative to TxC rising edge after TSOM has been set and TxE has been raised.
3. TxBE goes low relative to DBEN falling edge on the first write transfer into TDSR. It is reasserted 1 TxC time before the first bit of the transmitted SYNC/FLAG. TxBE then goes low relative to DBEN falling edge when writing into $TDSR_H$ and/or $TDSR_L$. It is reasserted on the rising edge of the TxC that corresponds to the transmission of the last bit of each character, except in BOP mode when the CRC is to be sent as the next character (see Transmit Timing—End of Message).

TRANSMIT—END OF BOP MESSAGE

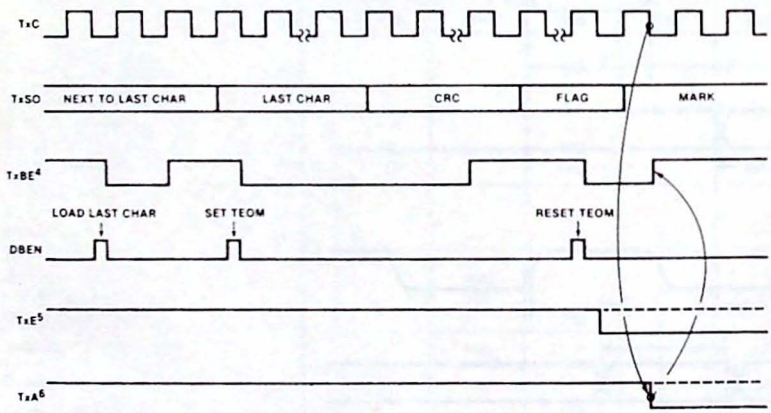

NOTES

4. TxBE goes low relative to the falling edge of DBEN corresponding to loading $TDSR_{H,L}$. It goes high one TxC before character transmission begins and also when TxA has been dropped.
5. TxE can be dropped before resetting TEOM if TxBE (corresponding to the closing FLAG) is high. Alternatively TxE can remain high and a new message initiated.
6. TxA goes low after TxE has been dropped and 1 1/2 TxC's after the last bit of the closing FLAG has been transmitted.

TIMING DIAGRAMS (Cont'd)

TRANSMIT TIMING—END OF BCP MESSAGE

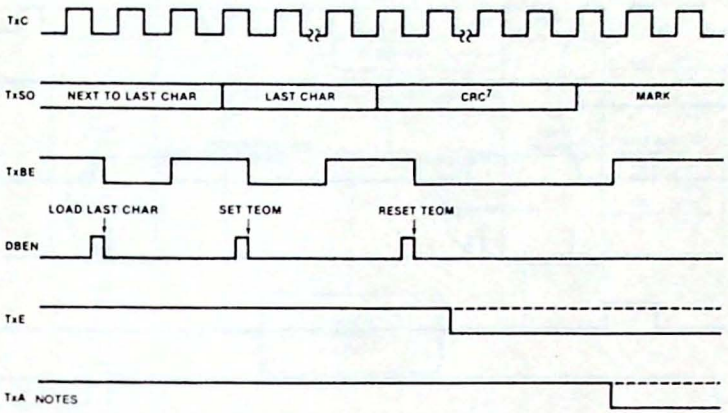

NOTES

7. When 2652 generated CRC is not required, TEOM should only be set if SYNCs are to follow the message block. In that case, TxE should be dropped in response to TxBE (which corresponds to the start of transmission of the last character). When CRC is required, TxE must be dropped before CRC transmission is complete. Otherwise, the contents of TxDB will be shifted out on TxSO. This facilitates transmission of contiguous messages.

TRANSMIT UNDERRUN

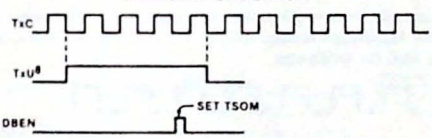

NOTES

8. TxU goes active relative to TxC falling edge if TxBE has not been serviced after n-1/2 TxC times (where n = transmit character length). TxU is reset on the TxC falling edge following assertion of the TSOM command.
9. An underrun will occur at the next character boundary if TEOM is reset and the transmitter remains enabled, unless the TSOM command is asserted or a character is loaded into the TxDB.

TIMING DIAGRAMS (Cont'd)

RECEIVE—START OF MESSAGE

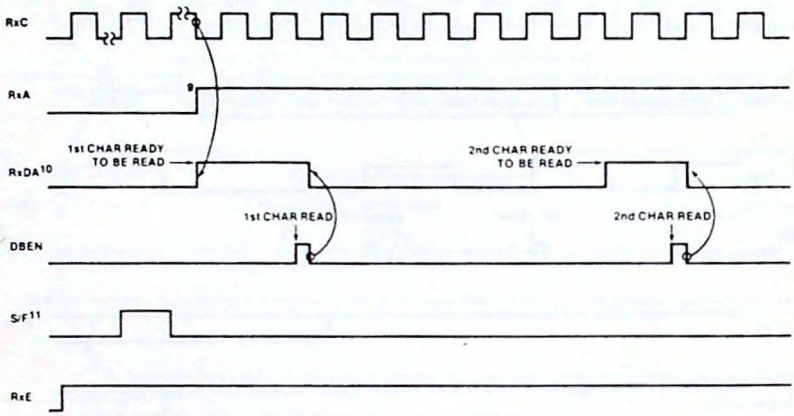

NOTES

9. RxA goes high relative to falling edge of RxC when RxE is high and
   a. A data character following two SYNC's is in RxDB (BCP mode)
   b. Character following FLAG is in RxDB (BOP primary station mode)
   c. Character following FLAG is in RxDB and character matches the secondary station address or All Parties Address (BOP secondary station mode)
10. RxDA goes high on RxC falling edge when a character in RxDB is ready to be read. It comes up before RxSA and goes low on the falling edge of DBEN when RxDB is read.
11. S/F goes high relative to rising edge of RxC anytime a SYNC (BCP) or FLAG (BOP) is detected.

RECEIVE END OF MESSAGE

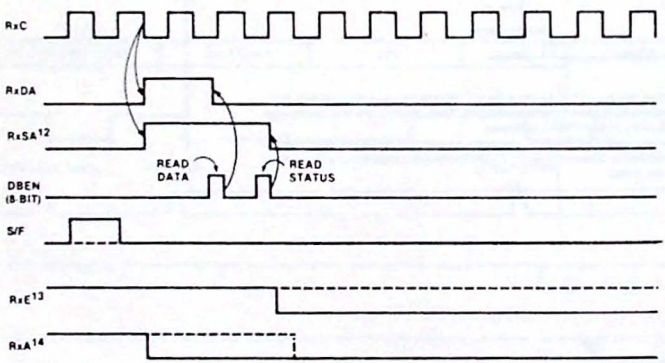

NOTES

12. At the end of a BOP message, RxSA goes high when FLAG detection (S/F = 1) forces REOM to be set. Processor should read the last data character (RDSR$_L$) and status (RDSR$_H$) which resets RxDA and RxSA respectively. For BCP end of message, RxSA may not be set and S/F = 0. The processor should read the last data character and status.
13. RxE must be dropped for BCP with non-contiguous messages. It may be left on at the end of a BOP message (see BOP Receive Operation).
14. RxA is reset relative to the falling edge of RxC after the closing FLAG of a BOP message (REOM = 1 and RxSA active) or when RxE is dropped.

TYYPICAL APPLICATIONS

2652 MPCC MICROPROCESSOR INTERFACE

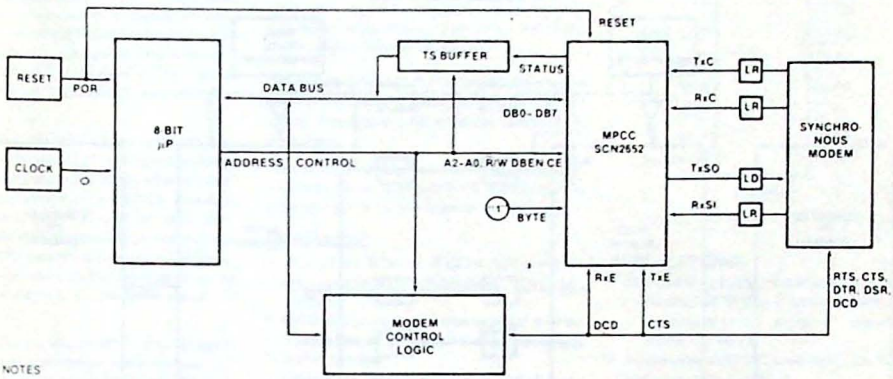

NOTES

1. Possible μP interrupt requests are
   RxDA, RxSA, TxBE, TxU
2. Other 2652 status signals and possible uses are
   S/F line: idle indicator, frame delimiter
   RxA handshake on RxE: line turn around control
   TxA handshake on TxE: line turn around control
3. Line Drivers/Receivers (LD/LR) convert EIA to TTL voltages and vice-versa
4. RTS should be dropped after the CRC (BCP) or FLAG (BOP) has been transmitted. This forces CTS low and TxE low
5. Corresponding high and low order bits of DB must be OR tied

DMA/PROCESSOR INTERFACE

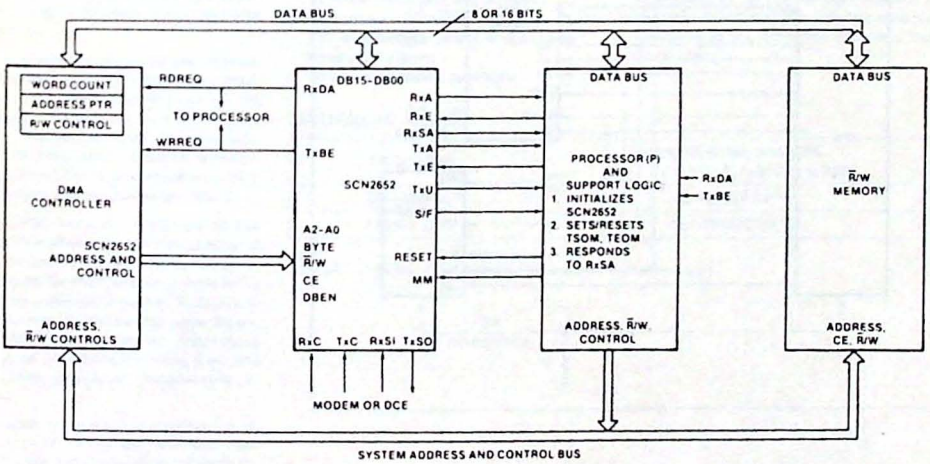

For non-DMA operation, TxBE and RxDA are sent to the processor which then loads or reads data characters as required.

TYPICAL APPLICATIONS (Cont'd)

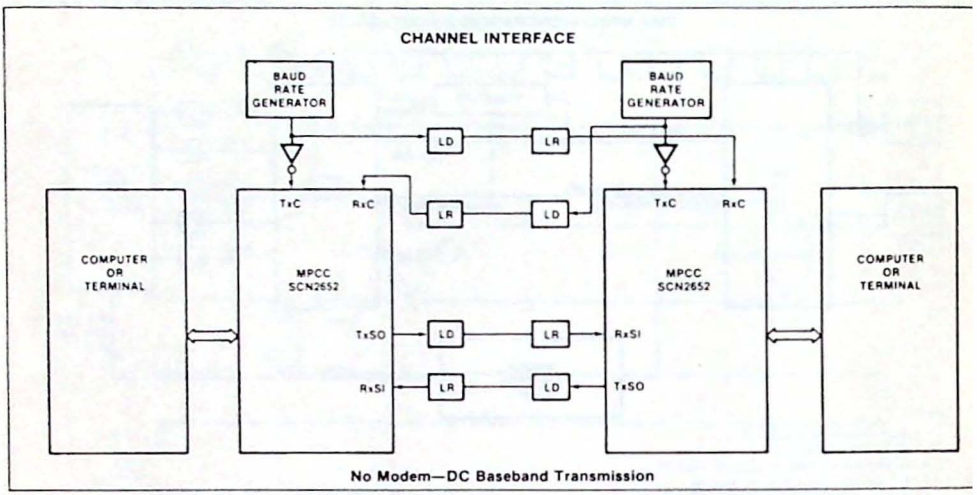

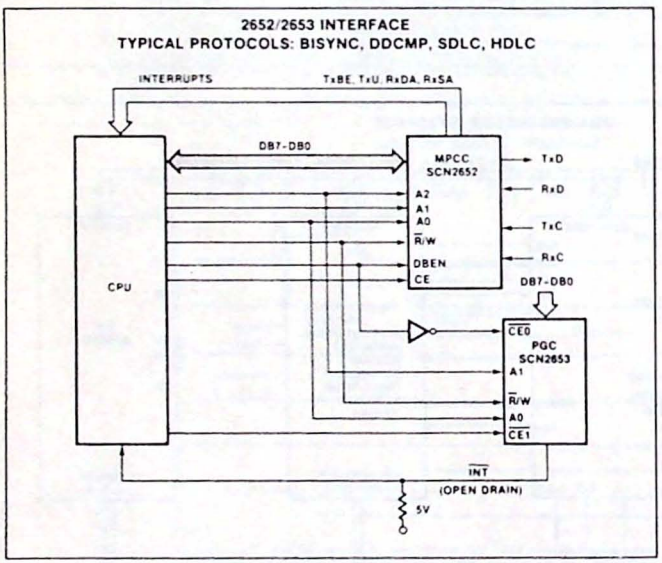

POOLYNOMIAL GENERATOR CHECKER (PGC) SCN2653/SCN68653

ESCCRIPTION

e Silignetics SCN2653/68653 Polynomial nerarator Checker (PGC) is a polynomial neraator checker/character comparator cuit t that complements a receiver/transter (R/T or USART/USRT/UART) in the cpoinrt of character oriented data link conis. TTable 1 defines many of the more nmtionly used PGC terms and abbrevions i.

ralleel data characters transferred been the CPU and R/T are monitored by PGGC which performs block check charer (BCC) and parity (VRC) generaichthecking, single character detection, t twwo character sequence detection. ce tthe PGC operates on parallel characs, thhe data transmission format may be al (synchronous or asynchronous) or alleel.

re a are four modes of BCC accumulation eaach mode can select one of three polyhalfs to compute the BCC. In the BISYNC nal ll and transparent modes, the PGC deinees which characters are to be accualeed and which characters are to be exled d from the accumulation. The block ninaating characters and the initiation and ninaation of BISYNC transparent text can leteected and an interrupt generated. The le u interrupt output represents the inclu- ORR of four maskable status conditions.

he automatic accumulation mode, all aactters are accumulated while the single imuulate mode requires a specific accuiioon command for each character to be imuulated.

aactter accumulation control and characommparisons are facilitated by a characflauss array which places each of 128 aaccters into one of four character sees. The four classes are normal, /BBISYNC not included, block terminathaaracter (BTC)/search character (SC), seecondary search character (SSC).

tioonal PGC applications include off-line opperation where the BCC is generated atata not sent to the R/T, BCC multiplexy ssharing the PGC among several R/Ts reaading/writing the partial BCC accuiioon on a character by character basis, ggeneration/checking on characters aariring on a bidirectional data bus, and raammable character comparisons or chnes.

opperation is half duplex (either receive or mmit, one way or two way alternate). Full ex i (two way simultaneous) is achieved by ; ttwo PGCs. The device is directly comle t with the Signetics SCN2651 Programe t Communications Interface (PCI) and SCN2661 Enhanced Programmable Communications Interface (EPCI). When used in BISYNC modes with the SCN2661, software requirements are minimized by the SCN2653-SCN2661 control character comparisons, character sequence comparisons, and automatic DLE insertion/detection.

Other bus oriented R/Ts can be interfaced to the PGC with a minimum of external circuitry. See figure 1 for a typical system configuration.

This NMOS LSI circuit is TTL compatible, operates from a single + 5V supply and is contained in a 16 pin dual in line package.

FEATURES

- **Parallel Block Check Character accumulation/checking: CRC-16, CRC-12, LRC-8**
- **BISYNC normal and transparent modes**
- **Automatic or single character accumulation modes**
- **Character detection - up to 128 characters**
- **Two character sequence detection; examples: DLE-STX, ACK 0, ACK 1, WACK, RVI, DISC, WBT**
- **6, 7, or 8-bit characters**
- **VRC generation/checking on data bus**
- **Four maskable interrupt conditions**
- **Four classes of characters**
- **Internal power-on reset**
- **Maximum character accumulation rate of 500 kHz (4 Mbps)**
- **Directly compatible with Signetics SCN2651, SCN2652 and SCN2661**
- **No system clock required**
- **TTL compatible inputs and outputs**
- **Single 5V supply**
- **16-pin dual in line package**

ORDERING CODE

PACKAGES	COMMERCIAL RANGES $V_{CC} = 5V \pm 5\%$, $T_A = 0°C$ to $+70°C$
Ceramic DIP	SCN2653AC4I16
Plastic DIP	SCN2653AC4N16

NOTE:
SCN68653 is identical to SCN2653. Order using part numbers shown above.

PIN CONFIGURATION

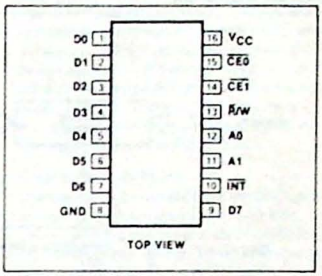

APPLICATIONS

- **Character oriented data link control:**
  - **-dedicated to one USART/USRT**
  - **-multiplexed among several USART/USRTs**
- **Automated BISYNC with 2661 (minimal software intervention)**
- **BCC and VRC generation/detection on a block of memory or peripheral data**
- **Programmable character array comparator**

BLOCK DIAGRAM

The PGC consists of six major sections. These are the operation control, character class array, DLE ROM, character register, BCC and parity generators, and BCC registers. These sections communicate with each other via an internal data bus and an internal control bus. The internal data bus interfaces to the CPU data bus via a data bus buffer.

BLOCK DIAGRAM

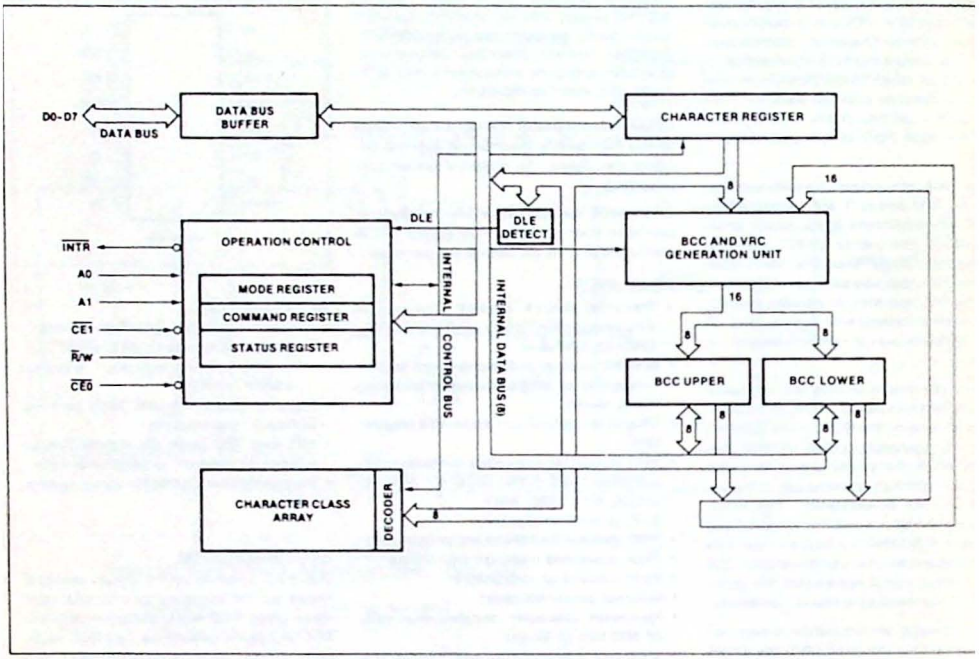

PIN DESIGNATION

MNEMONIC	PIN NO.	TYPE	NAME AND FUNCTION
VCC	16	I	**+5V:** Power supply
GND	8	I	Ground
A1-A0	11,12	I	**Address Lines:** Used to select internal PGC registers or character class array
$\overline{R}$/W	13	I	**Read/Write:** Read command when low, write command when high
$\overline{CE0}$	15	I	**Chip Enable:** Connected to chip enable input of a receiver/transmitter (R/T) circuit. It is used to strobe data being transferred between the CPU and the $\overline{R}$/T into the PGC character register.
$\overline{CE1}$	14	I	**Chip Enable:** Used in conjunction with the $\overline{R}$/W signal to enable the transfer of data between the PGC and the CPU or DMA controller and to initialize the PGC registers.
D7-D0	9,7-1	I/O	**Data Bus:** 8-bit three-state bidirectional bus used to transfer data to or from the PGC via $\overline{CE0}$ or $\overline{CE1}$. All data, mode words, command words, and status information are transferred on this bus. D0 is the least significant bit; D7 is the most significant bit.
$\overline{INT}$	10	O	**Interrupt:** Open drain active low interrupt output that signals the CPU that one or more maskable conditions are true: BCC error, VRC error, BTC/SC detect, SSC detect. The true conditions can be determined by reading the status register which in turn deactivates $\overline{INT}$. A power on, clear BCC, or master reset command causes $\overline{INT}$ to be inactive (high).

abble 1 GLOSSARY

TERM/ABBREVIATION	DEFINITION
BCC	Block check character
BTC	Block terminating character
SC	Search character
SSC	Second search character (preceded by DLE)
CRC-16	$X^{16} + X^{15} + X^2 + 1$ divisor, dividend pre-cleared
CRC-12	$X^{12} + X^{11} + X^3 + X^2 + X + 1$ divisor, dividend pre-cleared
LRC-8	Horizontal parity on least significant 7 bits; vertical parity on most significant bit
VRC	Vertical redundancy check (character parity)
R/T	Receiver/transmitter circuit. Also known as USART/USRT/UART/PCI/MPCC
BISYNC	IBM binary synchronous communications (BSC), ANSI X3.28, ISO 1745
MSB	Most significant bit
LSB	Least significant bit
Rx	Receive
Tx	Transmit

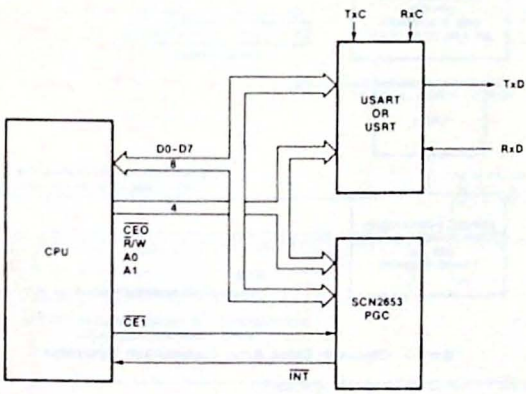

NOTES
1. Open drain $\overline{INT}$ may be OR tied with SCN2651 PCI, SCN2661 EPCI, or other open drain interrupt outputs.
2. No external circuitry necessary if SCN2651 or SCN2661 is the USART.

Figure 1. Typical System Configuration

Operation Control Unit

This functional block stores configuration and operation instructions from the CPU and generates appropriate signals to control the device operation. It also contains read and write circuits to permit communications between the CPU and the PGC registers via the data bus. The mode, command, and status registers are in this logic block.

Character Register

Characters to be considered for BCC generation, parity generation and checking, or character comparisons are loaded into this register by either $\overline{CE0}$ or $\overline{CE1}$. This register serves as an input to the BCC and VRC generator, where the accumulation and parity generation takes place. The character register also serves as the input for character class array and DLE comparisons.

Character Class Array

This 128 x 2 array holds the character class associated with each of 128 possible 7-bit characters. The array is zero after a master reset. When the character class array is loaded (see PGC Addressing), the character on the data bus is placed in the class specified by the contents of command register bits CR2 and CR3. The PGC uses these two command bits to represent four different character classes. These are:

1. Normal class (included in the accumulation)
2. SYN character/BISYNC not included class
3. Block terminating character/search class
4. Second search character class (preceded by DLE)

These encoded character classes are used by the PGC:

1. To control the BCC accumulation of associated characters in BISYNC modes only. BCC accumulation in automatic or single accumulation modes is carried out independent of the character classes.
2. To detect characters and two character sequences in all modes of accumulation and to set the control character detect bits in the status register.

It should be noted that any number of characters (up to 128 for CRC-16 or LRC-8, up to 64 for CRC-12) can be put into any one class.

If VRC is specified along with CRC-16 then the least significant 7 bits of the character are used for character array comparison. If VRC is not enabled, but CRC-16 is, the MSB of the character then determines whether a

character comparison is to take place. If the MSB is 0, the comparison takes place; if the MSB is 1, the comparison does not take place and the character is processed as though it were in the normal class. This enables the PGC to detect all communication control characters and DLE-SSC sequences.

Only the first 64 locations of the array are accessed if CRC-12 is selected. The user should right justify each six bit character (D0-D5) to be written into the character class array. Bit 6 must be zero.

If VRC is enabled, the generated parity becomes the most significant bit of the character to be compared. VRC is not allowed in BISYNC transparent mode.

The method in which the character register contents is compared against the character class array depends on the BCC polynomial chosen. Figure 2 illustrates the comparison process.

DLE Read Only Memory

The DLE characters are stored internally and are selected by the error polynomial as follows:

CRC-12: 01 1111
LCR-8 or CRC-16:
No VRC or odd VRC: 0001 0000
Even VRC: 1001 0000

BCC and Parity Generator

This functional block performs all the necessary computation to generate and update the BCC accumulation on a character by character basis. It contains the three generator polynomials (CRC-16, CRC-12, and LRC-8) that can be selected to compute the BCC. This block also checks and generates odd or even parity for 7-bit (ASCII) characters.

BCC Registers

This block consists of two 8-bit registers (BCC upper and BCC lower) which contain the high and low order bytes of the BCC accumulation. The result of the accumulation from the BCC and parity generator is stored in these registers. A recirculating register address pointer is initialized by a power on, master reset, or clear BCC command. The pointer alternately selects BCC upper and lower on successive BCC register accesses for CRC-16 or CRC-12. For LRC-8, BCC upper is always selected.

BCC upper and lower are cleared by a clear BCC or master reset command. The highest term of the BCC polynomial is always represented by bit 0 of BCC upper; the lowest term is always represented by bit 7 of BCC lower (see figure 3, Orientation of BCC Polynomials.)

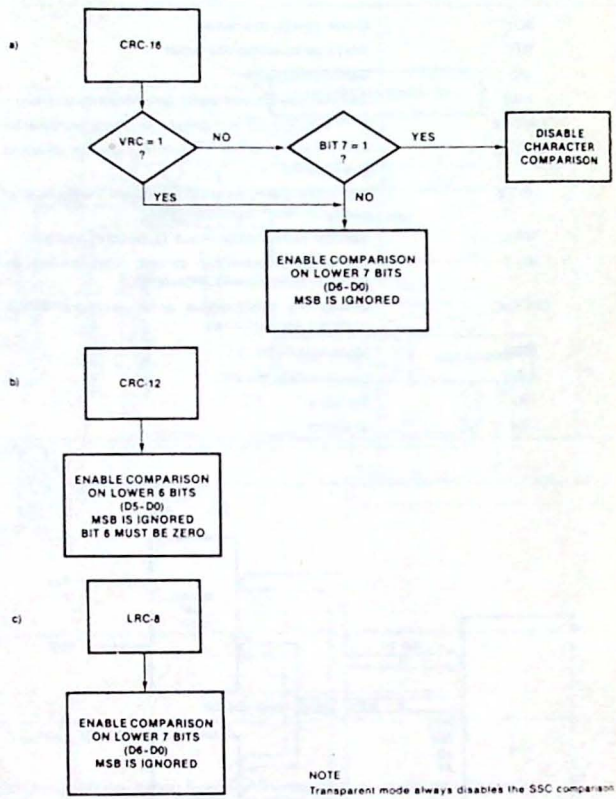

Figure 2. Character Class Array Comparison Operation

The length of the block check character depends on the error checking polynomial that is selected. If LRC-8 is chosen, the BCC result is stored entirely in BCC upper. The BCC lower remains unchanged from previous setting. Both BCC registers are used when CRC-16 is specified. When CRC-12 is selected, the block check character is 12 bits long. The six least significant bits of the BCC are stored in the least significant bits of the BCC lower. The remaining upper six bits of the BCC are stored in least significant bits of BCC upper. The two most significant bits in each BCC register are filled with zero.

The BCC register(s) are read by the CP after the last data character is transmitte They can then be sent to the R/T to cor plete a transmitted block of data. These re isters are read and loaded when one PGC time-shared by several R/Ts. Refer to App cations Information - Multiplexed PGC.

PGC Addressing

All internal registers and the character cla array are selected by the unique addre codes shown in table 2.

$$\frac{M(X)}{G(X)} = Q(X) + \frac{R(X)}{G(X)}, \text{ WHERE } R(X) = A_n X^n + A_{n-1} X^{n-1} \ldots + A_0 X^0$$

M (X) : BINARY POLYNOMIAL (DATA STREAM)
G (X) : FIXED DIVISOR TO GENERATE BCC
Q (X) : QUOTIENT AFTER BCC GENERATION
R (X) : REMAINDER AFTER BCC GENERATION

$$CRC - 16 = X^{16} + X^{15} + X^2 + 1$$

$$CRC - 12 = X^{12} + X^{11} + X^3 + X^2 + X + 1$$

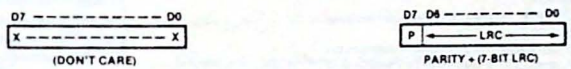

LRC — 8 = HORIZONTAL PARITY ON 7 LSB
VERTICAL PARITY ON MSB

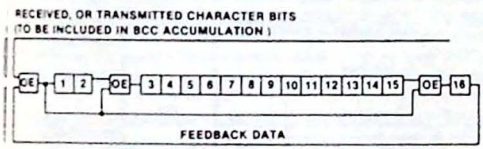

OPERATION OF BCC REGISTER FOR CRC-16 BCC ACCUMULATION (SIMPLIFIED)

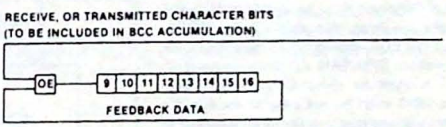

OPERATION OF BCC REGISTER FOR LRC BCC ACCUMULATION (SIMPLIFIED)

Figure 3. Orientation of BCC Polynomials

Table 2 ADDRESS CODES

$\overline{CE0}$	$\overline{CE1}$	A1	A0	$\overline{R}/W$	FUNCTION
0	0	X	X	X	Operation not guaranteed
0	1	0	0	0	If MR2 = 0 load data bus into character register If MR2 = 1 PGC not selected[1]
0	1	0	0	1	If MR2 = 1 load data bus into character register If MR2 = 0 PGC not selected[1]
0	1	0	1	X	PGC not selected[1]
0	1	1	0	X	PGC not selected[1]
0	1	1	1	X	PGC not selected[1]
1	0	0	0	0	Read character register
1	0	0	0	1	Load data bus into character register if MR1,0 ≠ 00[2]; write character class array using CR3, CR2 class code if MR1,0 = 00[3,4]
1	0	0	1	0	Read Status register
1	0	0	1	1	Write command register
1	0	1	0	0	Read mode register
1	0	1	0	1	Write mode register
1	0	1	1	0	Read BCC upper/lower[5]
1	0	1	1	1	Write BCC upper/lower[5]
1	1	X	X	X	PGC not selected[1]

NOTES
1. Data bus is 3-state
2. Character will not be accumulated unless MR3 = 1
3. Character will not be accumulated even if MR3 = 1
4. The mode bits MR1 and MR0 are cleared to 00 by power-on-reset, master reset, or by loading the mode register bits MR1 and MR0
5. Recirculating internal pointer selects BCC Upper on first access, BCC lower on next access for all BCCs except for LRC-8, in case of LRC-8, the pointer only selects BCC upper

INTERFACE SIGNALS AND TIMING

PGC data transfers are controlled by A1, A0, and $\overline{R}/W$ which must be stable prior to the active low going chip enable pulse. $\overline{CE0}$ is used for PGC monitoring of data transfers between a CPU/DMA controller and a R/T; $\overline{CE1}$ is used for direct CPU-to-PGC transfers. MR3 must be set prior to loading the character register in order to accumulate or compare characters via $\overline{CE1}$. The active low (leading) edge of chip enable initiates a PGC read/write cycle; the rising (trailing) edge ends the cycle and also serves as a write strobe.

When loading the character, mode, or command register, the data bus is strobed into the selected register on the trailing (rising) edge of the appropriate $\overline{CE}$. When writing into the character class array, the data on the bus (the special character) is placed in the class specified by command register bits CR3 and CR2.

Characters are transferred into the character register when $\overline{CE0}$ is active (low) depending on the state of MR2 and the $\overline{R}/W$ input. Characters from the R/T are loaded into the character register when in rece mode (MR2 = 0 and $\overline{R}/W$ = 0) wh CPU/DMA characters are loaded into t character register when in transmit mo (MR2 = 1 and $\overline{R}/W$ = 1). The time betwe consecutive chip enables is given by t_{CE} or t_{CED}.

The open drain active low interrupt sig ($\overline{INT}$) goes active whenever one or more four maskable status conditions (SR0-SR are true (= 1). A status read deactivat $\overline{INT}$.

The same techniques used in interfacing SCN2651 PCI to 8-bit microprocessors can used to interface the SCN2653 PGC (cons Application Note M22). Note that when dressing the R/T's holding registers, the P pins must have A1, A0 = 00 and that the dress and $\overline{R}/W$ signals must be stable (set prior to the active low chip enable. Wh using the SCN2651 or SCN2661 as the P the PGC's A1, A0, $\overline{R}/W$, and $\overline{CE0}$ are direc connected to comparable SCN2651 SCN2661 signals. Schematics of an SCN2 monitoring data transfers to/from Signetics SCN2651/2661 and SCN2652 shown in figures 4 and 5.

An alternate interfacing technique is to tr the PGC as an independent peripheral vice. This necessitates a write charac register instruction after the CPU reads writes a character to or from the R/T.

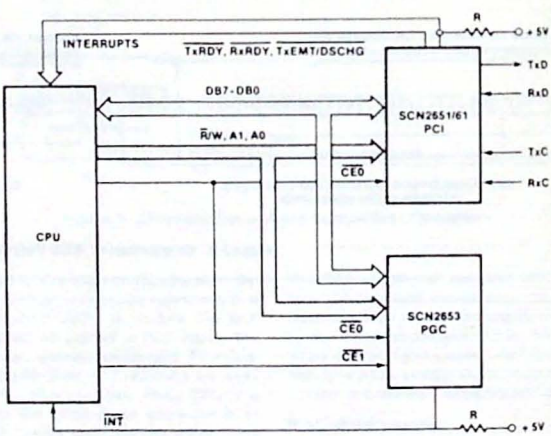

Figure 4. SCN2651 or SCN2661/2653 Interface

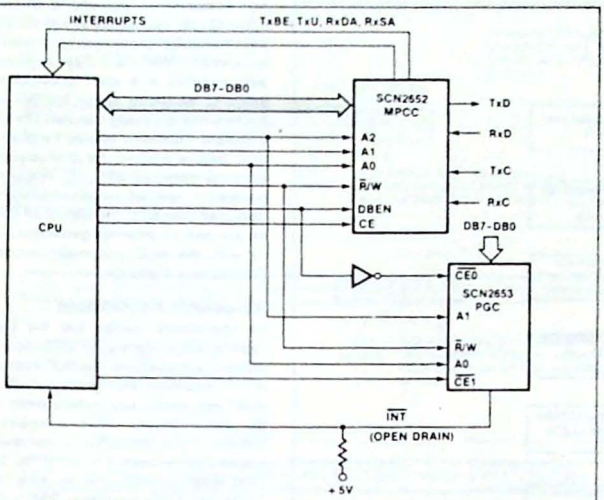

Figure 5. SCN2652/2653 Interface — Typical Protocols: BISYNC, DDCMP, SDLC, HDLC

PGC PROGRAMMING

The PGC operational mode must be initially programmed by the CPU (see figure 6). The mode register, command register and character class array should be written into, after a power-on-reset or a master reset command. The character class array should be programmed only for the classes pertinent to the application. After a master reset, the character class array is zero which places all characters in the normal class (included in the BCC accumulation).

OPERATION

The PGC should be initially configured by the CPU (via $\overline{CE1}$) prior to systems operation. This is done by loading the mode register, command register and character class array (see PGC PROGRAMMING). Characters may then be loaded into the character register for BCC accumulation, VRC generation/checking, BTC/SC and DLE-SSC comparisons. See table 3 for a summary of BCC accumulation modes.

BCC accumulation depends on the mode selected.

BISYNC Normal

In BISYNC normal mode, all characters loaded into the character register are accumulated except those in the SYN/BISYNC not included class. During receive (MR2 = 0), a BTC/SC match will cause the BCC accumulation to stop after the next one (LRC-8) or two (CRC-12 or CRC-16) characters have been accumulated. At that time, if the BCC accumulation does not equal zero, the BCC error bit (SR0) will be set and $\overline{INT}$ will go active if the corresponding mask bit (CR4) is enabled (= 1). In transmit (MR2 = 1), the BCC accumulation is automatically stopped once the BTC/SC character has been accumulated. The CPU must read the BCC upper and BCC lower (CRC-12 or CRC-16) register(s) and transmit them to the R/T.

Note that the received BCCs are not subject to VRC if CRC-16 is selected. If LRC-8 is selected, the received BCC is subject to VRC. An incorrect result will set the VRC error bit (SR1). After its accumulation, the least significant 7 bits of BCC upper are checked and a non-zero result will set the BCC error bit (SR0). BCCs are not checked against the character class array nor are they compared to the DLE ROM.

Second search character (SSC) detection is enabled so that a DLE-STX or two character communication control sequence can be detected.

Table 3 SUMMARY OF BCC ACCUMULATION MODES

ACCUMULATION MODES	START ACCUMULATION	STOP ACCUMULATION	CHARACTERS EXCLUDED FROM ACCUMULATION
BISYNC normal and BISYNC transparent	Clear BCC registers command Mode register is loaded with BISYNC or automatic mode Start accumulation command Load BCC registers	After BTC has been detected and received BCC is accumulated After transmitted BTC has been accumulated Single mode is selected	SYN/BISYNC not included class in normal mode DLE-SYN/not included class and first DLE of a DLE non SYN pair in transparent mode. These characters are not excluded if preceded by an odd number of DLEs
Automatic	Same as above	Single mode selected	None
Single	Start accumulation command	After each character has been accumulated	Up to user who must generate start accumulation command for each character to be included

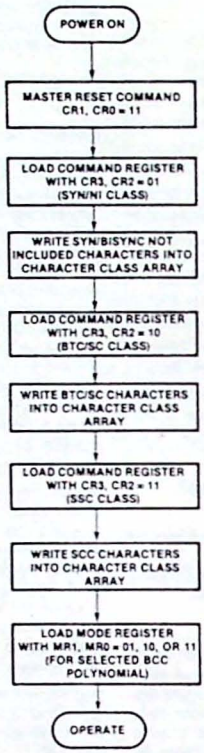

Figure 6. PGC Programming

BISYNC Transparent

BISYNC transparent mode should be used for data blocks beginning with DLE-STX if the DLEs are transferred between CPU and R/T ($\overline{CE0}$) or CPU and PGC ($\overline{CE1}$), i.e., DLEs are *not* stripped. VRC should be disabled in this mode. Characters excluded from the BCC accumulation are the first DLE of a DLE-non SYN sequence pair and the DLE-SYN sequence if not preceded by an odd number of DLEs. For example, consider the following transparent mode character string:

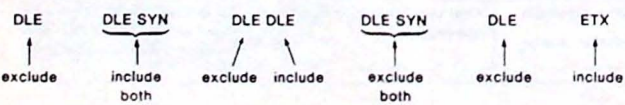

In receive and transmit modes, the termination of BCC accumulation works exactly as in BISYNC normal, except that the BTC/SC must be immediately preceded by an odd number of DLEs to be identified as a BTC/SC.

Second search character detection is not enabled in BISYNC transparent.

After a BTC/SC class character is detected by the PGC when receiving in either BISYNC mode, the following one or two characters are accumulated (depending on LRC-8 or CRC-12/16, respectively) and the PGC will automatically stop further accumulation. However, *the PGC can continue the accumulation* if a start accumulate command is issued or either BISYNC mode is loaded into the mode register. The start accumulate command should be given to the PGC before loading the character that follows the detected BTC/SC. This procedure enables a special search character to be detected (the BTC/SC detect bit (SR2) will be set and an interrupt generated if CR8 = 1) with the BCC accumulation continuing (see figures 7 and 8).

Automatic Accumulate

All characters loaded into the character register are accumulated, BTC/SC and SSC detection is enabled. The BCC accumulation is not automatically terminated. (The CPU must use single accumulate mode to stop the accumulation). When in receive mode, the BCC error bit (SR0) is set/reset after accumulating each character so that the CPU must examine this bit after the last character is accumulated. SR0 = 0 if the accumulated remainder in the BCC register(s) is zero; otherwise SR0 = 1. Examples of use of automatic accumulate mode usage include an R/T (SCN2651/SCN2661) in transparent DLE/SYN strip mode and asynchronous/synchronous/parallel DDCMP.

Single Accumulate

All characters for which a start accumulate command (CR1, CR0 = 01) is given are accumulated and compared against the character class array. If not given, the BCC accumulation is not updated and BTC/SC and SSC detection is disabled. Operation in this mode is otherwise identical to automatic accumulate.

Single accumulate mode can be used to selectively accumulate characters under CPU control or to accumulate characters that were unintentionally excluded in one of the other modes.

Polynomial Selection and DLE Comparison

The BCC polynomial may be CRC-16, CRC-12 or LRC-8. The cyclic redundancy check (CRC) is generated by dividing the binary value of a character in the character register by the selected polynomial. The quotient is discarded and the remainder is used as the BCC (two 6-bit characters for CRC-12, two 8-bit characters for CRC-16). CRC-16 uses all 8 bits of each BCC register. CRC-12 uses the least significant 6 bits of the BCC registers. The two most significant bits of the BCC registers are cleared to zero whenever CRC-12 is selected (see figure 3).

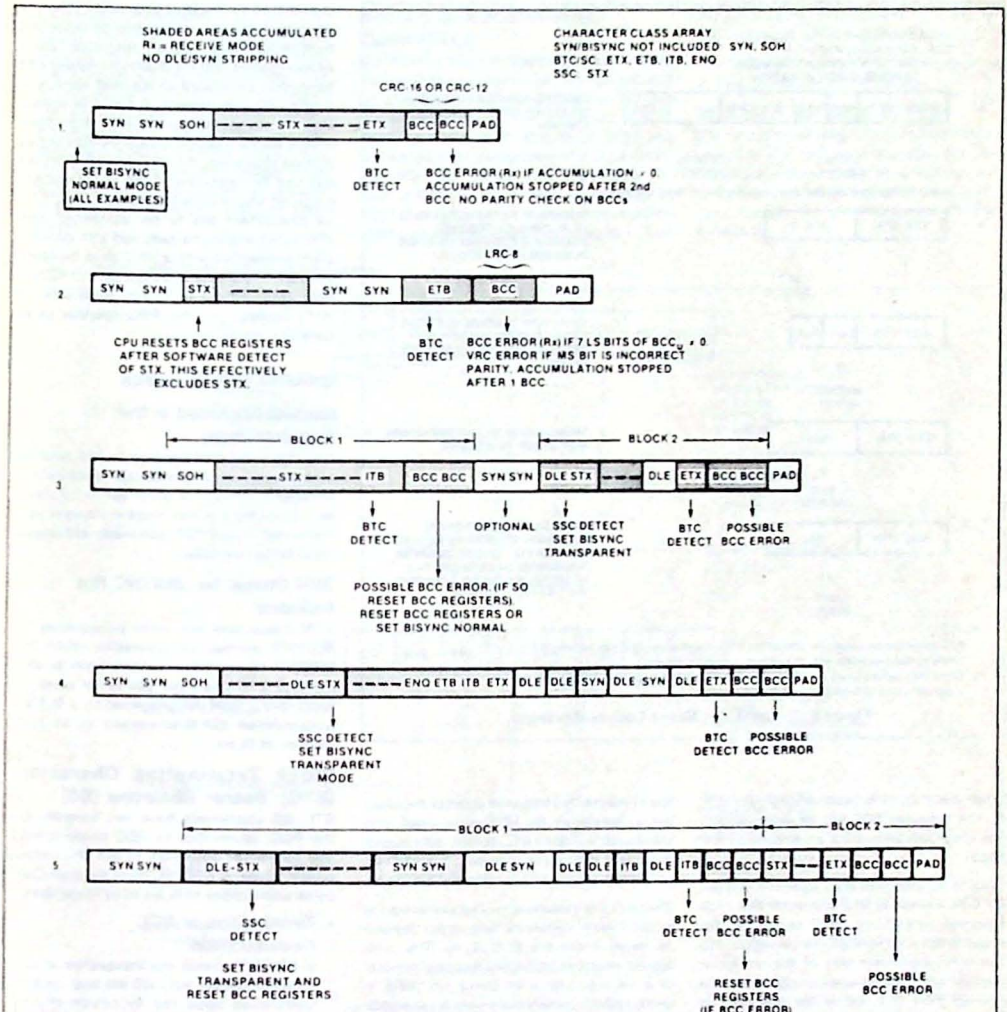

NOTES

1. BCC error *only* for receive mode. In transmit mode, CPU must respond to BTC detect by reading the BCC register(s) and sending them to the R/T. The accumulation is stopped after the BTC is accumulated.
2. ENQ (DLE ENQ) in a text message should be treated as an abort.
3. Opening SYNs may be stripped by the R/T.
4. The single accumulate mode and command can be used to accumulate a character that inadvertently was excluded. (For example, the DLE of a DLE STX if the PGC was in transparent mode and there was not a line turnaround prior to the DLE). The single accumulation should be done using $\overline{CE1}$ after the BCC(s) have been accumulated.

Figure 7. Examples — Bisync Text Message BCC Accumulation

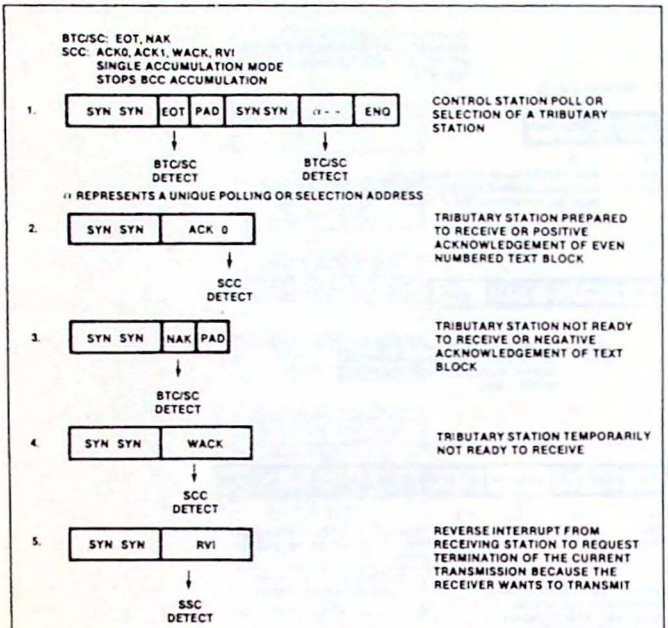

Figure 8. Examples — Bisync Control Messages

When the PGC is in receive mode (MR2 = 0), the recoived BCC will be accumulated. The result will be zero for an error free message.

CRC-12 is used with 6-bit codes. The internal 6-bit transcode DLE character hex 1F is selected by CRC-12. VRC should be disabled (MR4 = 0) for CRC-12 operation. The two most significant bits of the character register are ignored when compared to the internal 6-bit DLE. When the character is checked against the character class array, the MSB is ignored and the next MSB (bit 6) is assumed to be zero. If CRC-12 is specified, the user must write to the character class array with bit 6 cleared.

CRC-16 or LRC-8 implies the use of ASCII or EBCDIC although any 7-bit plus parity or 8-bit no parity code may be used (with DLE = hex 10 or hex 90). The DLE character compare is on an 8-bit basis with the generated parity (if VRC is enabled) as the MSB. When the character is compared against the character class array, the MSB is not used. This may result in a false BTC or SSC detection if there is a VRC error. However, the VRC error bit (SR1) will be set under that condition.

The LRC-8 is generated by the exclusive OR of the 7 least significant bits of the character register and the BCC upper. The most significant bit of the LRC-8 check character is a vertical odd/even parity bit (MR5 = 0/1), which is generated on the least significant bits of that character. The selection of LRC-8 implies VRC is enabled and that only the BCC upper is used for the BCC accumulation. The BCC lower remains unchanged from previous setting.

VRC Generation and Detection

Parity (VRC) is enabled by MR4 and specified as odd or even by MR5. VRC should be disabled when in BISYNC transparent mode and whenever CRC-12 or CRC-16 (EBCDIC) is selected as the BCC polynomial. MR4 = 1 enables VRC generation and detection for *both* receive and transmit operations. Characters loaded into the character register will have VRC generated on the least significant 7 bits with the generated parity bit written into the character register MSB. If the generated parity does not match the MSB of the loaded character, the VRC error bit (SR1) is set and $\overline{INT}$ asserted if the corresponding mask bit was enabled (CR5 = 1). Thus, if 7-bit characters are to be transmitted with VRC, CR5 should be zero and SR1 ignored. 8-bit characters with a VRC bit in the MSB position are parity checked by the PGC in both transmit (to R/T) and receive (from R/T) modes, i.e., the PGC operates as a data bus parity checker.

CHARACTER CLASSES

Normal (Included in the Accumulation)

Any character that belongs to this class is normal data, i.e., the character is not a communication control or other special character. Characters in this class are always accumulated in BISYNC, automatic and single accumulation modes.

SYN Character/BISYNC Not Included

SYN characters are never accumulated in BISYNC normal accumulation mode. In BISYNC transparent accumulation mode, the DLE-SYN character pair is not accumulated, but a SYN not preceded by a DLE is accumulated. (DLE is implied as an odd number of DLEs).

Block Terminating Character (BTC)/Search Character (SC)

BTC/SC characters have two functions in the PGC: termination of BCC accumulation and character detection. In BISYNC transparent mode, a BTC/SC must be preceded by an odd number of DLEs to be recognized.

- **Termination of BCC Accumulation**

  In BISYNC normal and transparent accumulation modes, the PGC will stop the accumulation upon the detection of the BTC/SC character. Examples of BTCs are ETX, ETB, ITB, ENQ.

  In receive mode, the accumulation is stopped after the following one (LRC-8) or two (CRC-12, CRC-16) character(s) have been accumulated. In transmit mode, the accumulation is stopped after the BTC/SC character has been accumulated. The BTC/SC character is always accumulated in all of the accumulation modes.

Character Detection

BTC/SC characters will be detected in any of the four accumulation modes when that character is being accumulated. The BTC/SC status bit (SR2) is set on detection. Since detection also stops BISYNC BCC accumulation, the BISYNC accumulation must be restarted if the character is not a BTC. This can be effected by loading BISYNC mode into the mode register or generating a start accumulation command.

Second Search Character Class (SSC)

Control functions in character oriented data link control procedures can be represented by a sequence of two characters, the first character being a DLE. Examples include ACK0, ACK1, WACK, RVI, DISC, WBT and the initiation of transparent text (DLE-STX). The PGC will detect such sequences, except in BISYNC transparent mode, when an SSC class character is being accumulated after being immediately preceded by an odd number of DLEs. Under those conditions, the SSC status bit (SR3) will be set.

The SSC character is always accumulated in all of the accumulation modes.

REGISTER BIT DESCRIPTION

The operation of the PGC is determined by programming the mode register and the command register. The status register provides feedback on potential interrupt conditions. Formats of these registers are shown in table 4.

Table 4. PGC REGISTER BIT FORMATS

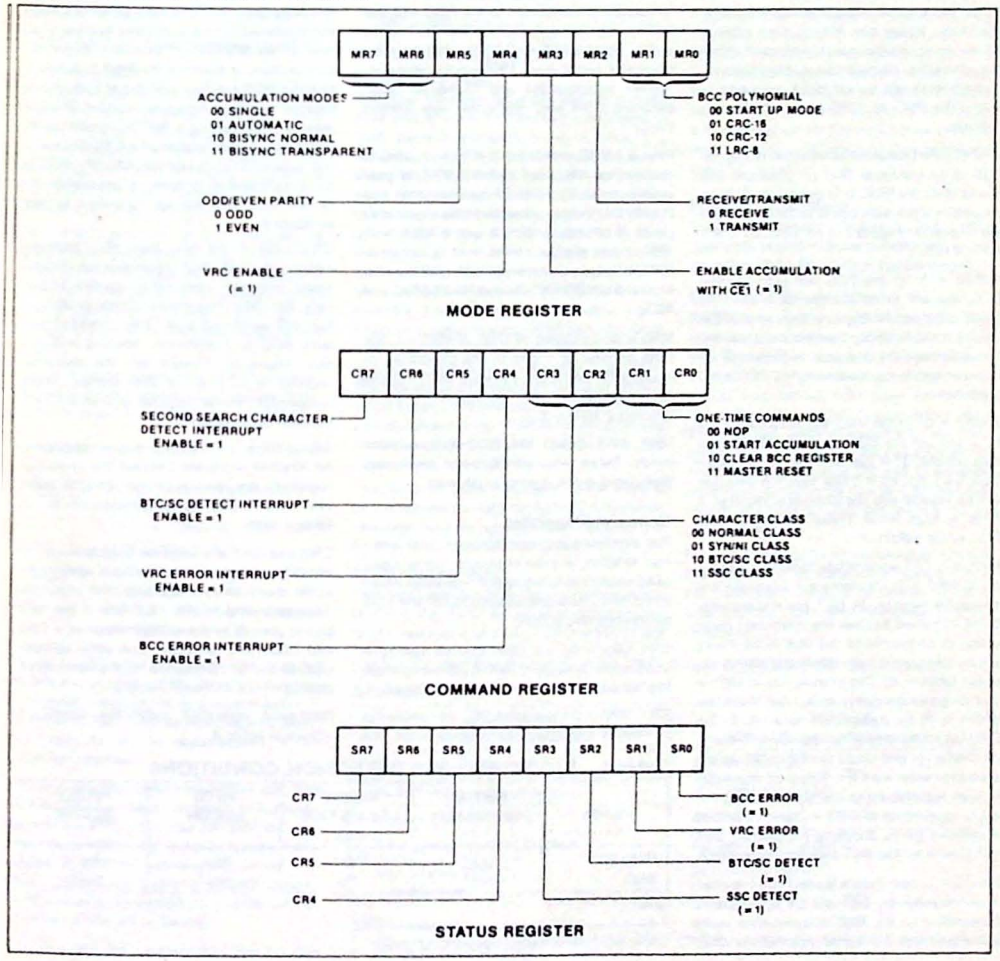

Table 5 BCC ACCUMULATION BY CHARACTER CLASS

CR3	CR2	CLASS	BISYNC NORMAL	BISYNC TRANSPARENT	AUTOMATIC ACCUM	SINGLE ACCUM
0	0	Normal	Yes	Yes	Yes	Yes
0	1	SYN/BISYNC not included	No	Yes, unless preceded by an odd number of DLEs	Yes	Yes
1	0	BTC/SC	Yes	Yes	Yes	Yes
1	1	SSC*	Yes	Yes	Yes	Yes

NOTE
*Preceded by DLE

Mode Register

The mode register defines general PGC operation characteristics. MR1 and MR0 = 00 permit the character class array to be programmed. These bits will be zero after a power on or master reset command. After the character class array is programmed, these bits should be set to 01, 10, or 11 to select the CRC-16, CRC-12 or LRC-8 polynomials.

MR2 (Tx/$\overline{\text{Rx}}$) determines whether or not the PGC is to generate (Tx) or generate and check (Rx) the BCC. It is used with $\overline{\text{R}}$/W to determine if the data bus is to be loaded into the character register when $\overline{\text{CE0}}$, $\overline{\text{CE1}}$, A1, A0 = 0100.

If MR2 = 1: 1) the PGC will generate the BCC, but will never set the BCC error bit (SR0). 2) If the $\overline{\text{R}}$/W pin is high when $\overline{\text{CE0}}$, $\overline{\text{CE1}}$, A1, A0 = 0100, then the data bus will be loaded into the character register. If $\overline{\text{R}}$/W is low under these conditions, the PGC is not selected.

If MR2 = 0: 1) the PGC will accumulate the BCC and set the BCC error bit (SR0) when appropriate. 2) If the $\overline{\text{R}}$/W pin is low when $\overline{\text{CE0}}$, $\overline{\text{CE1}}$, A1, A0 = 0100, then the data bus will be loaded into the character register. If $\overline{\text{R}}$/W is high under these conditions, the PGC is not selected.

MR3 is a $\overline{\text{CE1}}$ accumulate/compare enable bit. If MR3 = 0, characters loaded into the character register by $\overline{\text{CE1}}$ are *not* accumulated, checked against the character class array, or compared to the DLE ROM. Parity will be generated and checked if VRC is enabled (MR4 = 1). The primary use of MR3 = 0 is to generate parity on a 7-bit character which is to be transmitted to an R/T. The CPU loads the character register with the 7-bit character and reads the 8-bit VRC generated character via $\overline{\text{CE1}}$. This 8-bit character is then transferred to the R/T via $\overline{\text{CE0}}$. Another application of MR3 = 0 is for a CPU to interleave parity checking on memory data ($\overline{\text{CE1}}$) with on line R/T data transfers ($\overline{\text{CE0}}$).

If MR3 = 1, characters loaded into the character register by $\overline{\text{CE1}}$ will be accumulated (according to the BCC accumulation mode selected) and compared against the character class array and DLE ROM. This bit setting should be used when the CPU/DMA controller sends data characters to be accumulated or compared to the PGC and the R/T is inactive (off line). If the R/T were active, then a DLE or BTC loaded into the character register via $\overline{\text{CE0}}$ would cause incorrect accumulation and character comparisons if the next character was loaded via $\overline{\text{CE1}}$.

MR4 is a VRC enable bit. If MR4 = 1, VRC is enabled as odd/even by MR5. VRC is generated on the 7 LS bits of the character and the MS bit is checked against the generated parity. If not equal, SR1 is set. If MR4 = 0, VRC is not enabled. MR4 = 0 is used for BISYNC transparent mode with ASCII code, and for both BISYNC modes for EBCDIC and SBT.

MR5 is an odd/even VRC bit. If MR5 = 1, the total number of 1 bits in the character including the parity bit is even. If MR5 = 0, the total number of bits is odd. This bit is ignored if MR4 = 0.

MR7, MR6 select the BCC accumulation mode. These modes have been previously discussed in the operation section.

Command Register

The command register contains four interrupt enables, a 2-bit character class code used when programming the character class array, and 2 bits that specify three one time commands and a NOP.

CR1, CR0 = 00 is a NOP. This bit setting is used when changing CR7-CR2 without affecting any of the 3 one time commands.

CR1, CR0 = 01 is a start BCC accumulation command. In single accumulation mode, the character accumulated is the character that is in the character register at the time the command is given. The accumulation stops immediately after the character has been accumulated. If the command is given in either of the BISYNC or automatic accumulation modes, it enables the PGC to accumulate the BCC starting with the *next* character loaded into the character register. This is a means of restarting a BISYNC normal accumulation after detection of a BTC/SC that is not a valid BTC (example; CR, LF, TAB). In all accumulation modes, a previously detected DLE will not be cancelled by this command.

CR1, CR0 = 10 is a clear BCC registers command. Both BCC registers are cleared along with the associated internal pointer and SR0-SR3. The pointer points to BCC upper. $\overline{\text{INT}}$ is forced high. This command permits BCC accumulation, starting with the next character loaded into the character register in BISYNC or auto modes. Single accumulate mode requires a start BCC accumulation command.

CR1, CR0 = 11 is a master reset command. All internal registers (except the character register), the internal pointer, and the entire character class array are cleared. $\overline{\text{INT}}$ is forced high.

CR3 and CR2 are used for programming the character class array. During a write character class array instruction, the character corresponding to the 7 LS bits of the data bus is placed in the class contained in CR3 and CR2. The encoded character classes control the accumulation of the associated character as shown in table 5.

Detection operates under the conditions shown in table 6.

Table 6 BTC/SC AND SSC DETECTION CONDITIONS

CLASS	BISYNC NORMAL	BISYNC TRANSPARENT	AUTO ACCUM	SINGLE ACCUM
BTC/SC	Yes	Yes*	Yes	Yes †
SSC	Yes*	No	Yes*	Yes*†

NOTES
* Only if immediately preceded by an odd number of DLEs
† Start accumulate command necessary for detection

CR7, CR6, CR5, CR4 are interrupt enables that individually enable/disable $\overline{INT}$ when these corresponding status register condition is true (set). Each bit is set in order to enable $\overline{INT}$ upon the condition. Each bit is reset to disable $\overline{INT}$ upon the condition. The state of these bits may be read via the status register (SR7, SR6, SR5, SR4).

The corresponding status bits (SR3, SR2, SR1, SR0) are set independent of the interrupt enables. The bit assignments are:

CR4 - BCC error interrupt enable

CR5 - VRC error interrupt enable

CR6 - BTC/SC detect interrupt enable

CR7 - DLE-SSC detect interrupt enable

Status Register

This register reflects the status of the 4 conditions that are potential interrupt ($\overline{INT}$) sources and the 4 interrupt enables in the command register. A status register read clears SR0, SR1, SR2, SR3 and deactivates $\overline{INT}$. These bits are also cleared by a master reset or clear BCC command.

SR0 is a BCC error bit. This bit can only be set in receive mode (MR2 = 0). In BISYNC normal and BISYNC transparent modes, SR0 will be set/reset once the accumulation has been stopped by the detection of the BTC/SC character and accumulation of the BCC(s).

In automatic and single accumulate modes, SR0 is set/reset after each character in the character register has been accumulated.

The rules for the detection of a BCC error are:

SR0 = 1 LRC-8: 7 least significant bits of BCC upper ≠ 0
CRC-12, CRC-16: BCC upper *or* BCC lower ≠ 0

SR0 = 0 LRC-8: 7 least significant bits of BCC upper = 0
CRC-12, CRC-16: BCC upper *and* BCC lower = 0

SR1 is a VRC error bit. When set, this bit reports a character parity error (on receive or transmit) when parity is enabled (MR4 = 1). Parity is odd/even as specified by MR5. The parity bit will be regenerated in the character register.

SR2 is a BTC/SC detect bit. When set, this bit indicates the character being accumulated is of the BTC/SC class for BISYNC normal, automatic and single accumulate modes. In BISYNC transparent mode, the BTC/SC character being accumulated must be *immediately* preceded by an odd number of DLEs for this bit to be set.

SR3 is a DLE SSC detect bit. This bit can only be set when in BISYNC normal, auto, or single accumulate modes. When set, it indicates that the character being accumulated is of the SSC class when that character was *immediately* preceded by an odd number of DLEs.

SR7, SR6, SR5, SR4 are interrupt enables. These 4 bits reflect the state of the interrupt enable command bits CR7, CR6, CR5, and CR4, as follows:

SR4 - BCC error

SR5 - VRC error

SR6 - BTC/SC detect

SR7 - SSC detect

APPLICATIONS INFORMATION

Dedicated PGC

The most efficient use of the 2653 is to dedicate one to each R/T for two way alternate (half duplex) operation or two to each R/T for two way simultaneous (full duplex) operation (see figure 9). The CPU configures each PGC (using $\overline{CE1}$) by initializing the mode register, command register, and character class array. Data transfers to or from the R/T can then be on a DMA basis with each receiver holding register ready signal used as a read request (RREQ) and each transmit holding register available signal used as a write request (WREQ) to the DMA controller. The CPU needs only to respond to enabled interrupts from each of the PGCs. The individual $\overline{INT}$ outputs can be wire-OR'd into a single CPU interrupt ($\overline{INTRPT}$) with one pull up resistor. Each PGC in this system has a unique address that is decoded into the respective chip enables.

The CPU or DMA controller could send a block of memory data to the PGC to be error checked without sending that data to the R/T. In that case, $\overline{CE1}$ is used.

Multiplexed PGC

One PGC may be time-shared among a few R/Ts if the CPU saves and restores the mode register and partial BCC result in the BCC registers. These registers are accessed via $\overline{CE1}$. There must be a separate save area for each R/T (serial channel) and a channel pointer indicating the last R/T that transferred or received a data character (see figure 10).

The loading of the BCC registers will clear SR0-SR3 and all previously detected special characters, i.e., DLE, BTC/SC, BCC (BISYNC modes). The BCC accumulation will start again when the next character is loaded into the character register in all accumulation modes except single. That mode requires a start accumulation command.

Figures 11 and 12 represent software flow diagrams for transmit and receive service requests. Note that interrupts from all other R/Ts must be masked during a read or write to the BCC registers so as not to affect the internal BCC address pointer. It is recommended that all R/T interrupts be masked while servicing an interrupt that accesses any PGC register.

BISYNC Operation

Table 7 is a concise listing of 2651/2661 operating modes with recommended corresponding 2653 BCC accumulation modes.

Character Comparator

The PGC can be used as a programmable data bus character comparator which monitors data bus transfers (CPU—peripheral, CPU—CPU, CPU—memory, memory—peripheral (via DMA)). The user selectively loads the character class array with BTC/SC and SSC characters to be compared. Status bits will be set and an interrupt can be generated upon SC and DLE - SSC detection. A match on one to 128 different characters or DLE - SSC sequences can be programmed.

Figure 13 depicts an arrangement where the DMA controller or slave CPU handles data bus transfers, the PGC interrogates the data bus, and the host CPU responds to PGC interrupts.

Table 7 BISYNC (ANSI 3.28, ISO 1745) MODES FOR 2651/2661 AND 2653

2651/2661 OPERATING MODES	2653 BCC ACCUMULATION MODE
Sync normal non-strip	BISYNC normal
Sync transparent non-strip	BISYNC transparent
Normal SYN/DLE strip[1]	BISYNC normal
Transparent SYN/DLE strip[1]	Automatic accumulate[2]
Async (with SYN/DLE characters)	BISYNC normal

NOTES
1 CPU should switch to non strip mode after BTC detect. Otherwise a received BCC could be inadvertently stripped
2 SSC detect should be ignored

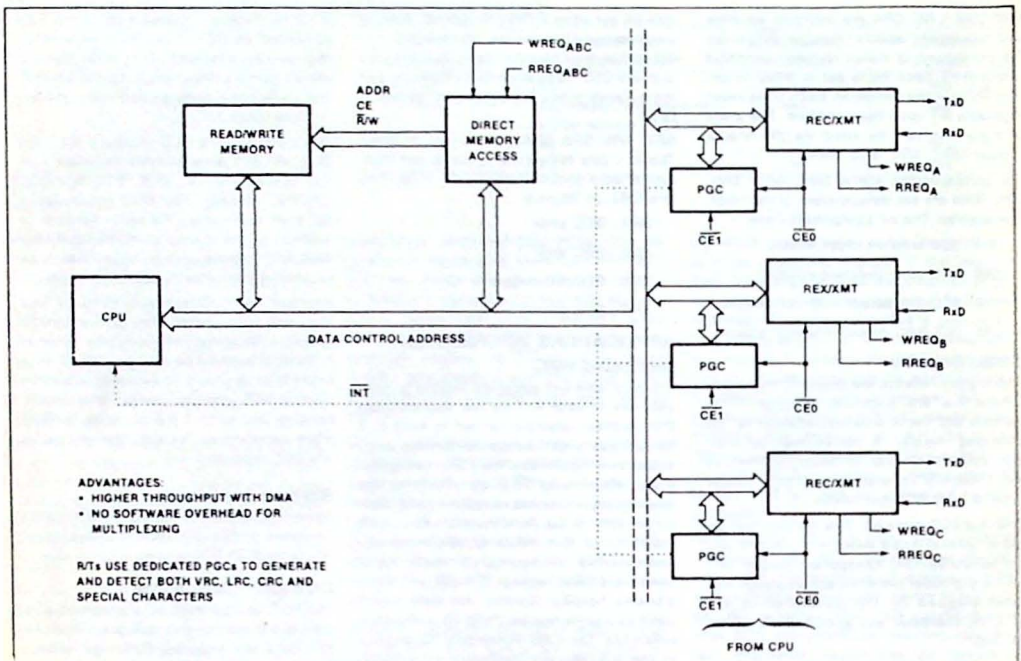

Figure 9. One PGC Per Receiver/Transmitter

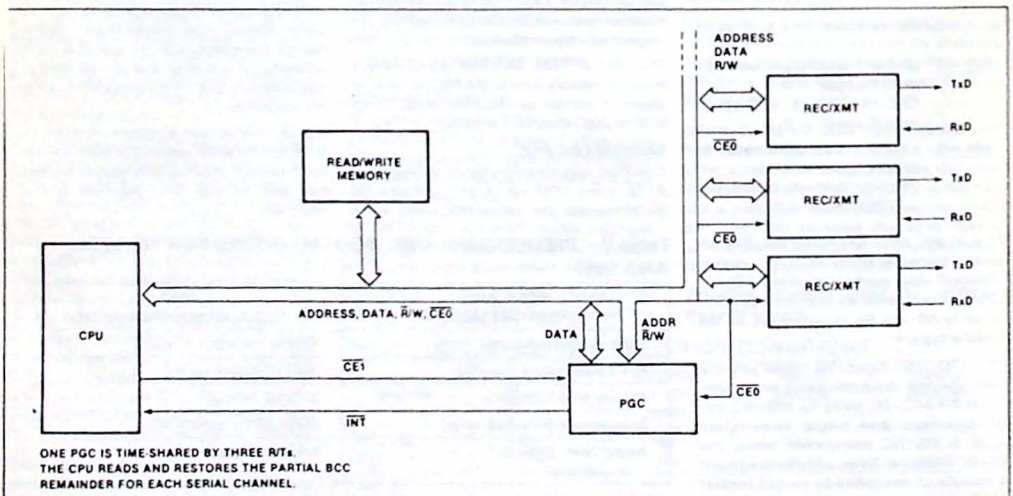

Figure 10. PGC Services Multiple Receivers/Transmitters

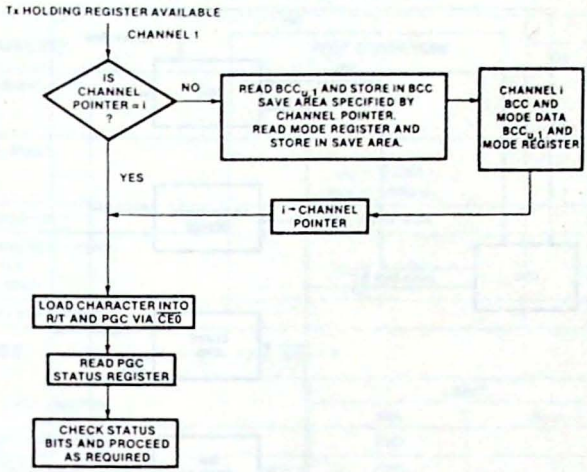

Figure 11. Multiplexed PGC — Transmit to R/T

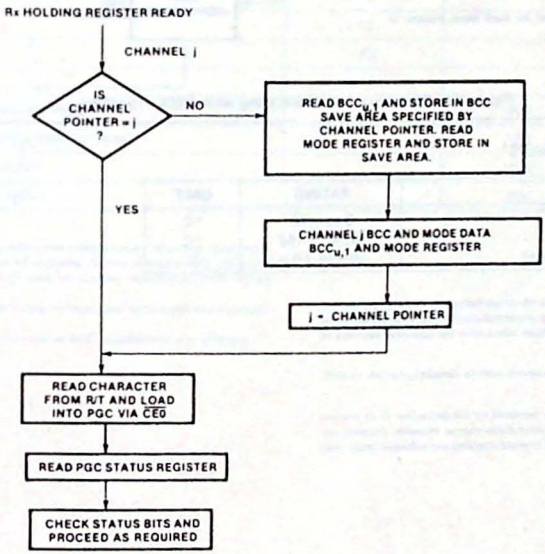

Figure 12. Multiplexed PGC — Receiver from R/T

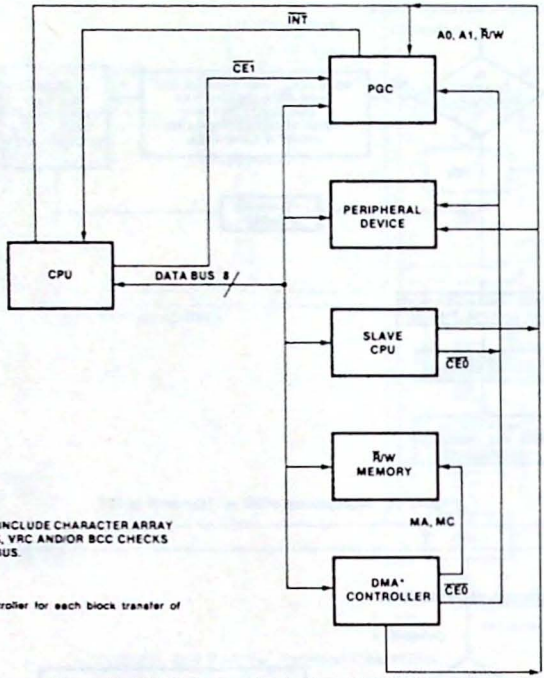

APPLICATIONS INCLUDE CHARACTER ARRAY COMPARISIONS, VRC AND/OR BCC CHECKS ON THE DATA BUS.

NOTE
* CPU initializes DMA controller for each block transfer of data.

Figure 13. PGC Data Bus Monitoring with DMA Transfers

ABSOLUTE MAXIMUM RATINGS[1]

PARAMETER	RATING	UNIT
Operating ambient temperature[2]	0 to +70	°C
Storage temperature	-65 to +150	°C
All voltages with respect to ground[3]	-0.5 to +6.0	V

NOTES

1. Stresses above those listed under "Absolute Maximum Ratings" may cause permanent damage to the device. This is a stress rating only and functional operation of the device at these or at any other condition above those indicated in the operation sections of this specification is not implied.
2. For operating at elevated temperatures the device must be derated based on +150°C maximum junction temperature.
3. This product includes circuitry specifically designed for the protection of its internal devices from the damaging effects of excessive static charge. However, it is suggested that conventional precautions be taken to avoid applying any voltages larger than the rated maxima.

DC ELECTRICAL CHARACTERISTICS T_A = 0°C to 70°C, V_{CC} = 5.0V ± 5%

PARAMETER		TEST CONDITIONS	LIMITS			UNIT
			Min	Typ	Max	
	Input voltage					V
V_{IL}	Low				0.8	
V_{IH}	High		2.0			
	Output voltage					V
V_{OL}	Low	I_{OL} = 2.2mA		0.25	0.45	
V_{OH}	High	I_{OH} = −400μA	2.4	2.8		
I_{IL}	Input load current	V_{IN} = 0 to 5.5V			10	μA
	Output leakage current					μA
I_{LD}	Data bus	V_{OUT} = 4.0V			10	
I_{LO}	Open drain	V_{OUT} = 4.0V			10	
I_{CC}	Power supply current			45	75	mA

AC CHARACTERISTICS T_A = 0° to +70°C, V_{CC} = 5V ± 5%[1, 2, 3]

PARAMETER		LIMITS		UNIT
		Min	Max	
t_{CE}	Chip enable pulse width	250		ns
t_{CED}	Chip enable period D	1750		ns
t_{CEC}[4]	Chip enable period C	1750		ns
t_{AS}	Address setup	10		ns
t_{AH}	Address hold	10		ns
t_{CS}	Control setup	10		ns
t_{CH}	Control hold	10		ns
t_{DS}[5]	Data setup	150		ns
t_{DH}	Data hold	15		ns
t_{DD}[6]	Data delay time for read		200	ns
t_{DF}[6]	Data bus floating time for read		100	ns
t_{INTL}[7]	Interrupt low delay		1600	ns
t_{INTH}[7]	Interrupt high delay		600	ns

NOTES

1. Parameters are valid over operating temperature range unless otherwise specified.
2. All voltage measurements are referenced to ground. All time measurements are at 50% level for inputs and at the 0.8V or 2.0V level for outputs. Input levels for testing are 0.45V and 2.4V.
3. Typical values are at +25°C, typical supply voltages and typical processing parameters.
4. t_{CEC} = 800ns during PGC initialization when no BCC accumulation is in progress.
5. t_{DS} = 50ns whenever $\overline{CE0}$ is used.
6. Test conditions: C_L = 150 pF.
7. $\overline{INT}$ is an open drain output.

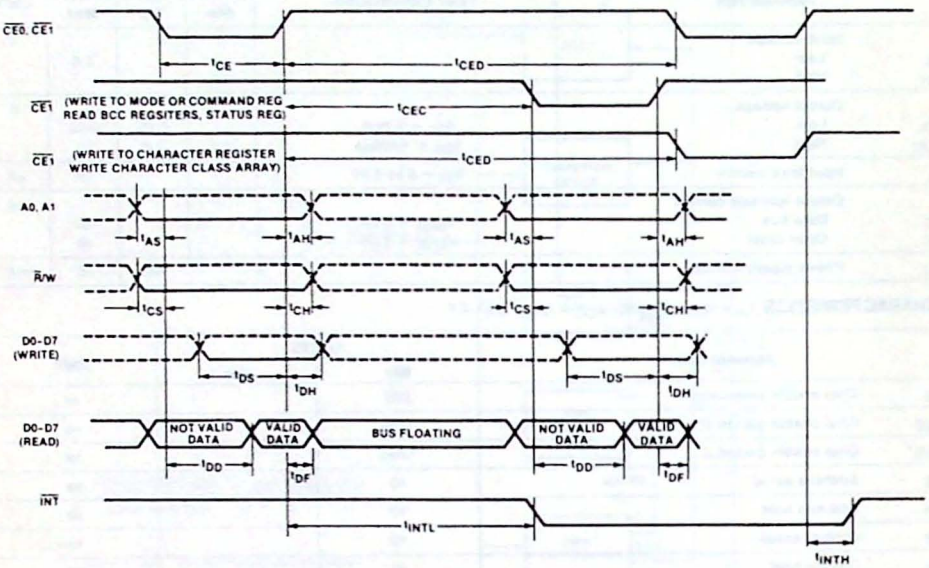

Figure 14. PGC Timing

DESCRIPTION

The Signetics SCN2661 EPCI is a universal synchronous/asynchronous data communications controller chip that is an enhanced version of the SCN2651. It interfaces easily to all 8-bit and 16-bit microprocessors and may be used in a polled or interrupt driven system environment. The SCN2661 accepts programmed instructions from the microprocessor while supporting many serial data communications disciplines—synchronous and asynchronous—in the full or half-duplex mode. Special support for BISYNC is provided.

The EPCI serializes parallel data characters received from the microprocessor for transmission. Simultaneously, it can receive serial data and convert it into parallel data characters for input to the microcomputer.

The SCN2661 contains a baud rate generator which can be programmed to either accept an external clock or to generate internal transmit or receive clocks. Sixteen different baud rates can be selected under program control when operating in the internal clock mode. Each version of the EPCI (A, B, C) has a different set of baud rates.

FEATURES

- Synchronous operation
  - 5 to 8-bit characters plus parity
  - Single or double SYN operation
  - Internal or external character synchronization
  - Transparent or non-transparent mode
  - Transparent mode DLE stuffing (Tx) and detection (Rx)
  - Automatic SYN or DLE-SYN insertion
  - SYN, DLE and DLE-SYN stripping
  - Odd, even, or no parity
  - Local or remote maintenance loop back mode
  - Baud rate: dc to 1M bps (1X clock)
- Asynchronous operation
  - 5 to 8-bit characters plus parity
  - 1, 1½ or 2 stop bits transmitted
  - Odd, even, or no parity
  - Parity, overrun and framing error detection
  - Line break detection and generation
  - False start bit detection
  - Automatic serial echo mode (echoplex)
  - Local or remote maintenance loop back mode
  - Baud rate: dc to 1M bps (1X clock)
    dc to 62.5K bps (16X clock)
    dc to 15.625K bps (64X clock)

OTHER FEATURES

- Internal or external baud rate clock
- 3 baud rate sets
- 16 internal rates for each set
- Double buffered transmitter and receiver
- Dynamic character length switching
- Full or half duplex operation
- TTL compatible inputs and outputs
- RxC and TxC pins are short circuit protected
- Single 5V power supply
- No system clock required

APPLICATIONS

- Intelligent terminals
- Network processors
- Front end processors
- Remote data concentrators
- Computer to computer links
- Serial peripherals
- BISYNC adaptors

PIN CONFIGURATIONS

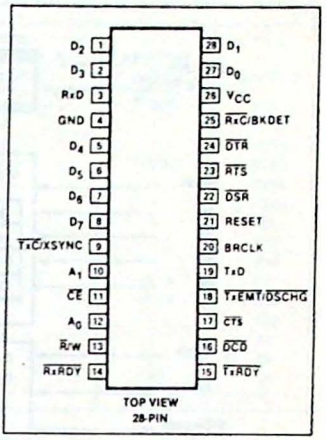

ORDERING CODE

PACKAGES	$V_{CC} = 5V \pm 5\%$ COMMERCIAL 0°C to +70°C	AUTOMOTIVE −40°C to +85°C	MILITARY −55°C to +125°C
Ceramic DIP 28-Pin 0.6" Wide	SCN2661AC1I28 SCN2661BC1I28 SCN2661CC1I28	SCN2661AA1I28 SCN2661BA1I28 SCN2661CA1I28	SCN2661AM1I28 SCN2661BM1I28 SCN2661CM1I28
Plastic DIP 28-Pin 0.6" Wide	SCN2661AC1N28 SCN2661BC1N28 SCN2661CC1N28	Contact Factory	Not Available

NOTES
1. See table 1 for baud rates. Specify SCN2661A, B, or C depending on baud rate selected.
2. The SCN68661 is identical to the SCN2661. Order using part numbers above.

BLOCK DIAGRAM

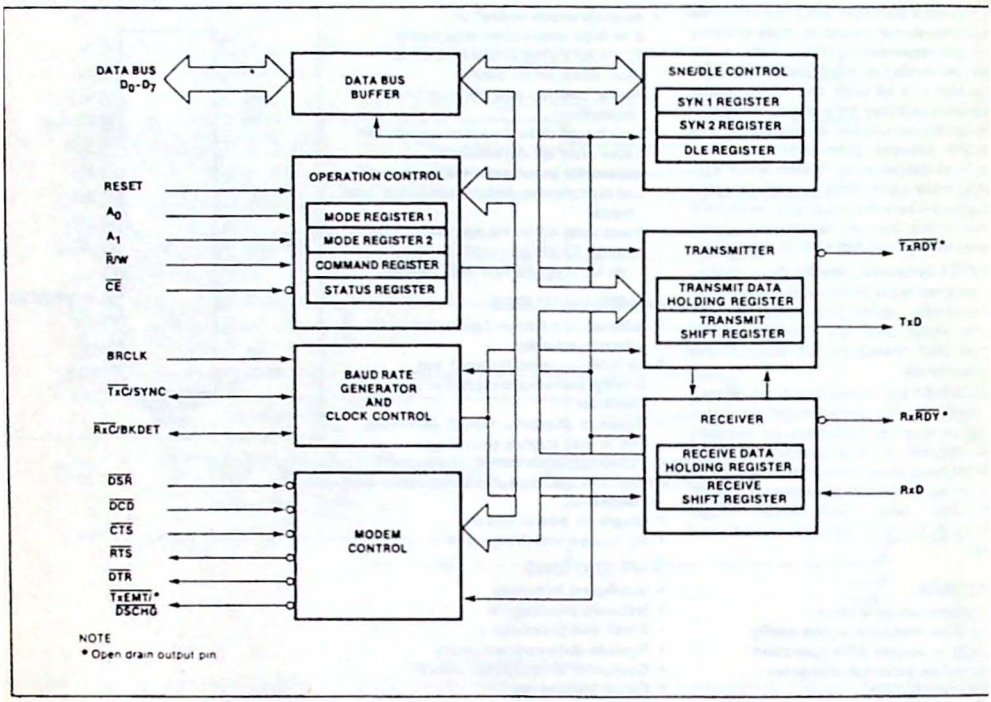

BLOCK DIAGRAM

The EPCI consists of six major sections. These are the transmitter, receiver, timing, operation control, modem control and SYN/DLE control. These sections communicate with each other via an internal data bus and an internal control bus. The internal data bus interfaces to the microprocessor data bus via a data bus buffer.

Operation Control

This functional block stores configuration and operation commands from the CPU and generates appropriate signals to various internal sections to control the overall device operation. It contains read and write circuits to permit communications with the microprocessor via the data bus and contains mode registers 1 and 2, the command register, and the status register. Details of register addressing and protocol are presented in the EPCI programming section of this data sheet.

Table 1 BAUD RATE GENERATOR CHARACTERISTICS SCN2661A (BRCLK = 4.9152MHz)

MR23-20	BAUD RATE	ACTUAL FREQUENCY 16X CLOCK	PERCENT ERROR	DIVISOR
0000	50	0.8kHz	-	6144
0001	75	1.2	-	4096
0010	110	1.7598	−0.01	2793
0011	134.5	2.152	-	2284
0100	150	2.4	-	2048
0101	200	3.2	-	1536
0110	300	4.8	-	1024
0111	600	9.6	-	512
1000	1050	16.8329	0.196	292
1001	1200	19.2	-	256
1010	1800	28.7438	−0.19	171
1011	2000	31.9168	−0.26	154
1100	2400	38.4	-	128
1101	4800	76.8	-	64
1110	9600	153.6	-	32
1111	19200	307.2	-	16

Timing

The EPCI contains a baud rate generator (BRG) which is programmable to accept external transmit or receive clocks or to divide an external clock to perform data communications. The unit can generate 16 commonly used baud rates, any one of which can be selected for full duplex operation. See table 1.

Receiver

The receiver accepts serial data on the RxD pin, converts this serial input to parallel format, checks for bits or characters that are unique to the communication technique and sends an "assembled" character to the CPU.

Transmitter

The transmitter accepts parallel data from the CPU, converts it to a serial bit stream, inserts the appropriate characters or bits (based on the communication technique) and outputs a composite serial stream of data on the TxD output pin.

Modem Control

The modem control section provides interfacing for three input signals and three output signals used for "handshaking" and status indication between the CPU and a modem.

SYN/DLE Control

This section contains control circuitry and three 8-bit registers storing the SYN1, SYN2, and DLE characters provided by the CPU. These registers are used in the synchronous mode of operation to provide the characters required for synchronization, idle fill and data transparency.

Table 1 BAUD RATE GENERATOR CHARACTERISTICS (Cont'd)

SCN2661B (BRCLK = 4.9152MHz)

MR23-20	BAUD RATE	ACTUAL FREQUENCY 16X CLOCK	PERCENT ERROR	DIVISOR
0000	45.5	0.7279kHz	0.005	6752
0001	50	0.8	-	6144
0010	75	1.2	-	4096
0011	110	1.7598	−0.01	2793
0100	134.5	2.152	-	2284
0101	150	2.4	-	2048
0110	300	4.8	-	1024
0111	600	9.6	-	512
1000	1200	19.2	-	256
1001	1800	28.7438	−0.19	171
1010	2000	31.9168	−0.26	154
1011	2400	38.4	-	128
1100	4800	76.8	-	64
1101	9600	153.6	-	32
1110	19200	307.2	-	16
1111	38400	614.4	-	8

SCN2661C (BRCLK = 5.0688MHz)

MR23-20	BAUD RATE	ACTUAL FREQUENCY 16X CLOCK	PERCENT ERROR	DIVISOR
0000	50	0.8kHz	-	6336
0001	75	1.2	-	4224
0010	110	1.76	-	2880
0011	134.5	2.1523	0.016	2355
0100	150	2.4	-	2112
0101	300	4.8	-	1056
0110	600	9.6	-	528
0111	1200	19.2	-	264
1000	1800	28.8	-	176
1001	2000	32.081	0.253	158
1010	2400	38.4	-	132
1011	3600	57.6	-	88
1100	4800	76.8	-	66
1101	7200	115.2	-	44
1110	9600	153.6	-	33
1111	19200	316.8	3.125	16

NOTE
16X clock is used in asynchronous mode. In synchronous mode, clock multiplier is 1X and BRG can be used only for TxC.

Table 2 CPU-RELATED SIGNALS

PIN NAME	INPUT/ OUTPUT	FUNCTION
RESET	I	A high on this input performs a master reset on the 2661. This signal asynchronously terminates any device activity and clears the mode, command and status registers. The device assumes the idle state and remains there until initialized with the appropriate control words.
A_1-A_0	I	Address lines used to select internal EPCI registers.
$\overline{R}$/W	I	Read command when low, write command when high.
$\overline{CE}$	I	Chip enable command. When low, indicates that control and data lines to the EPCI are valid and that the operation specified by the $\overline{R}$/W, A_1 and A_0 inputs should be performed. When high, places the D_0-D_7 lines in the three-state condition.
D_7-D_0	I/O	8-bit, three-state data bus used to transfer commands, data and status between EPCI and the CPU. D_0 is the least significant bit; D_7 the most significant bit.
$\overline{TxRDY}$	O	This output is the complement of status register bit SR0. When low, it indicates that the transmit data holding register (THR) is ready to accept a data character from the CPU. It goes high when the data character is loaded. This output is valid only when the transmitter is enabled. It is an open drain output which can be used as an interrupt to the CPU.
$\overline{RxRDY}$	O	This output is the complement of status register bit SR1. When low, it indicates that the receive data holding register (RHR) has a character ready for input to the CPU. It goes high when the RHR is read by the CPU, and also when the receiver is disabled. It is an open drain output which can be used as an interrupt to the CPU.
$\overline{TxEMT}$/ $\overline{DSCHG}$	O	This output is the complement of status register bit SR2. When low, it indicates that the transmitter has completed serialization of the last character loaded by the CPU, or that a change of state of the $\overline{DSR}$ or $\overline{DCD}$ inputs has occurred. This output goes high when the status register is read by the CPU, if the TxEMT condition does not exist. Otherwise, the THR must be loaded by the CPU for this line to go high. It is an open drain output which can be used as an interrupt to the CPU.
$\overline{INTR}$	O	This is an active low output which is the wire-OR of the $\overline{TxRDY}$, $\overline{RxRDY}$, and $\overline{TxEMT}$/ $\overline{DSCHG}$ outputs on the 28-pin version. See above.

OPERATION

The functional operation of the 2661 is programmed by a set of control words supplied by the CPU. These control words specify items such as synchronous or asynchronous mode, baud rate, number of bits per character, etc. The programming procedure is described in the EPCI programming section of the data sheet.

After programming, the EPCI is ready to perform the desired communications functions. The receiver performs serial to parallel conversion of data received from a modem or equivalent device. The transmitter converts parallel data received from the CPU to a serial bit stream. These actions are accomplished within the framework specified by the control words.

Receiver

The 2661 is conditioned to receive data when the $\overline{DCD}$ input is low and the RxEN bit in the command register is true. In the asynchronous mode, the receiver looks for a high to low (mark to space) transition of the start bit on the RxD input line. If a transition is detected, the state of the RxD line is sampled again after a delay of one-half of a bit time. If RxD is now high, the search for a valid start bit is begun again. If RxD is still low, a valid start bit is assumed and the receiver continues to sample the input line at one bit time intervals until the proper number of data bits, the parity bit, and one stop bit have been assembled. The data are then transferred to the receive data holding register, the RxRDY bit in the status register is set, and the $\overline{RxRDY}$ output is asserted. If the character length is less than 8 bits, the high order unused bits in the holding register are set to zero. The parity error, framing error, and overrun error status bits are strobed into the status register on the positive going edge of $\overline{RxC}$ corresponding to the received character boundary. If the stop bit is present, the receiver will immediately begin its search for the next start bit. If the stop bit is absent (framing error), the receiver will interpret a space as a start bit if it persists into the next bit time interval. If a break condition is detected (RxD is low for the entire character as well as the stop bit), only one character consisting of all zeros (with the FE status bit SR5 set) will be transferred to the holding register. The RxD input must return to a high condition before a search for the next start bit begins.

Pin 25 can be programmed to be a break detect output by appropriate setting of MR27-MR24. If so, a detected break will cause that pin to go high. When RxD returns to mark for one RxC time, pin 25 will go low. Refer to the break detection timing diagram.

Taable 3 DEVICE-RELATED SIGNALS

PIN NAME	INPUT/ OUTPUT	FUNCTION
BBRCLK	I	Clock input to the internal baud rate generator (see table 1). Not required if external receiver and transmitter clocks are used.
$\overline{RR}$xC/BKDET	I/O	Receiver clock. If external receiver clock is programmed, this input controls the rate at which the character is to be received. Its frequency is 1X, 16X or 64X the baud rate, as programmed by mode register 1. Data are sampled on the rising edge of the clock. If internal receiver clock is programmed, this pin can be a 1X/16X clock or a break detect output pin.
$\overline{T}$TxC/XSYNC	I/O	Transmitter clock. If external transmitter clock is programmed, this input controls the rate at which the character is transmitted. Its frequency is 1X, 16X or 64X the baud rate, as programmed by mode register 1. The transmitted data changes on the falling edge of the clock. If internal transmitter clock is programmed, this pin can be a 1X/16X clock output or an external jam synchronization input.
R RxD	I	Serial data input to the receiver. "Mark" is high, "space" is low.
T TxD	O	Serial data output from the transmitter. "Mark" is high, "space" is low. Held in mark condition when the transmitter is disabled.
I $\overline{DSR}$	I	General purpose input which can be used for data set ready or ring indicator condition. Its complement appears as status register bit SR7. Causes a low output on $\overline{TxEMT}$/$\overline{DSCHG}$ when its state changes if CR2 or CR0 = 1.
$\overline{DCD}$	I	Data carrier detect input. Must be low in order for the receiver to operate. Its complement appears as status register bit SR6. Causes a low output on $\overline{TxEMT}$/$\overline{DSCHG}$ when its state changes if CR2 or CR0 = 1. If $\overline{DCD}$ goes high while receiving, the RxC is internally inhibited.
$\overline{CTS}$	I	Clear to send input. Must be low in order for the transmitter to operate. If it goes high during transmission, the character in the transmit shift register will be transmitted before termination.
$\overline{DTR}$	O	General purpose output which is the complement of command register bit CR1. Normally used to indicate data terminal ready.
$\overline{RTS}$	O	General purpose output which is the complement of command register bit CR5. Normally used to indicate request to send. If the transmit shift register is not empty when CR5 is reset (1 to 0), then $\overline{RTS}$ will go high one TxC time after the last serial bit is transmitted.

When the EPCI is initialized into the synchronous mode, the receiver first enters the hunt mode on a 0 to 1 transition of RxEN(CR2). In this mode, as data are shifted into the receiver shift register a bit at a time, the contents of the register are compared to the contents of the SYN1 register. If the two are not equal, the next bit is shifted in and the comparison is repeated. When the two registers match, the hunt mode is terminated and character assembly mode begins. If single SYN operation is programmed, the SYN DETECT status bit is set. If double SYN operation is programmed, the first character assembled after SYN1 must be SYN2 in order for the SYN DETECT bit to be set. Otherwise, the EPCI returns to the hunt mode. (Note that the sequence SYN1-SYN1-SYN2 will not achieve synchronization.) When synchronization has been achieved, the EPCI continues to assemble characters and transfer them to the holding register, setting the RxRDY status bit and asserting the $\overline{RxRDY}$ output each time a character is transferred. The PE and OE status bits are set as appropriate. Further receipt of the appropriate SYN sequence sets the SYN DETECT status bit. If the SYN stripping mode is commanded, SYN characters are not transferred to the holding register. Note that the SYN characters used to establish initial synchronization are not transferred to the holding register in any case.

External jam synchronization can be achieved via pin 9 by appropriate setting of MR27-MR24. When pin 9 is an XSYNC input, the internal SYN1, SYN1-SYN2, and DLE-SYN1 detection is disabled. Each positive going signal on XSYNC will cause the receiver to establish synchronization on the rising edge of the next RxC pulse. Character assembly will start with the RxD input at this edge. XSYNC may be lowered on the next rising edge of RxC. This external synchronization will cause the SYN DETECT status bit to be set until the status register is read. Refer to XSYNC timing diagram.

Transmitter

The EPCI is conditioned to transmit data when the $\overline{CTS}$ input is low and the TxEN command register bit is set. The 2661 indicates to the CPU that it can accept a character for transmission by setting the TxRDY status bit and asserting the $\overline{TxRDY}$ output. When the CPU writes a character into the transmit data holding register, these conditions are negated. Data are transferred from the holding register to the transmit shift register when it is idle or has completed transmission of the previous character. The TxRDY conditions are then asserted again. Thus, one full character time of buffering is provided.

In the asynchronous mode, the transmitter automatically sends a start bit followed by the programmed number of data bits, the least significant bit being sent first. It then appends an optional odd or even parity bit and the programmed number of stop bits. If, following transmission of the data bits, a new character is not available in the transmit holding register, the TxD output remains in the marking (high) condition and the $\overline{TxEMT}/\overline{DSCHG}$ output and its corresponding status bit are asserted. Transmission resumes when the CPU loads a new character into the holding register. The transmitter can be forced to output a continuous low (BREAK) condition by setting the send break command bit (CR3) high.

In the synchronous mode, when the 2661 is initially conditioned to transmit, the TxD output remains high and the TxRDY condition is asserted until the first character to be transmitted (usually a SYN character) is loaded by the CPU. Subsequent to this, a continuous stream of characters is transmitted. No extra bits (other than parity, if commanded) are generated by the EPCI unless the CPU fails to send a new character to the EPCI by the time the transmitter has completed sending the previous character. Since synchronous communication does not allow gaps between characters, the EPCI asserts TxEMT and automatically "fills" the gap by transmitting SYN1s, SYN1-SYN2 doublets, or DLE-SYN1 doublets, depending on the state of MR16 and MR17. Normal transmission of the message resumes when a new character is available in the transmit data holding register. If the SEND DLE bit in the command register is true, the DLE character is automatically transmitted prior to transmission of the message character in the THR.

EPCI PROGRAMMING

Prior to initiating data communications, the 2661 operational mode must be programmed by performing write operations to the mode and command registers. In addition, if synchronous operation is programmed, the appropriate SYN/DLE registers must be loaded. The EPCI can be reconfigured at any time during program execution. A flowchart of the initialization process appears in figure 1.

The internal registers of the EPCI are accessed by applying specific signals to the $\overline{CE}$, $\overline{R}/W$, A_1 and A_0 inputs. The conditions necessary to address each register are shown in table 4.

The SYN1, SYN2, and DLE registers are accessed by performing write operations with the conditions $A_1 = 0$, $A_0 = 1$, and

Table 4 2661 REGISTER ADDRESSING

$\overline{CE}$	A_1	A_0	$\overline{R}/W$	FUNCTION
1	X	X	X	Three-state data bus
0	0	0	0	Read receive holding register
0	0	0	1	Write transmit holding register
0	0	1	0	Read status register
0	0	1	1	Write SYN1/SYN2/DLE registers
0	1	0	0	Read mode registers ½
0	1	0	1	Write mode registers ½
0	1	1	0	Read command register
0	1	1	1	Write command register

NOTE
See AC characteristics section for timing requirements.

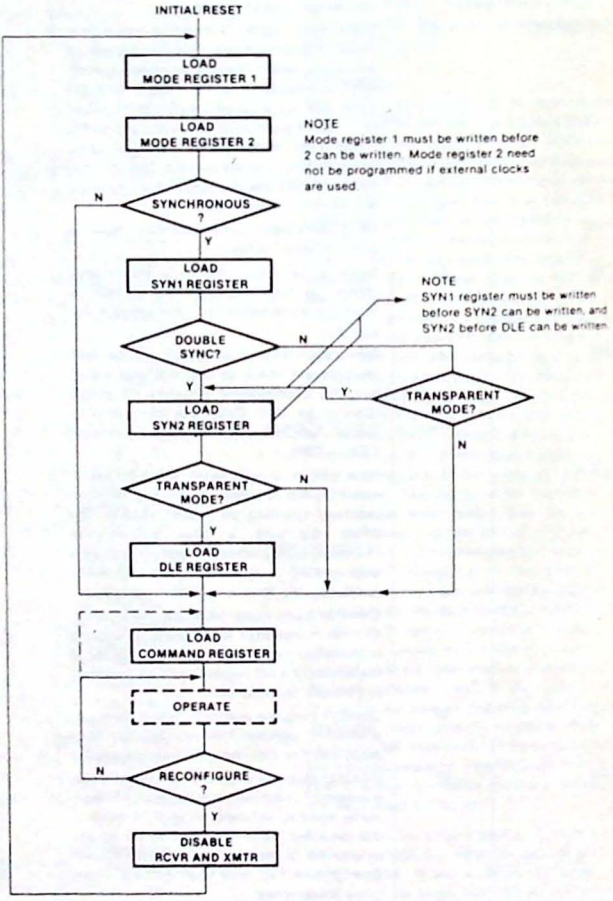

Figure 1. 2661 Initialization Flow Chart

R/W = 1. The first operation loads the SYN1 register. The next loads the SYN2 register, and the third loads the DLE register. Reading or loading the mode registers is done in a similar manner. The first write (or read) operation addresses mode register 1, and a subsequent operation addresses mode register 2. If more than the required number of accesses are made, the internal sequencer recycles to point at the first register. The pointers are reset to SYN1 register and mode register 1 by a RESET input or by performing a read command register operation, but are unaffected by any other read or write operation.

The 2661 register formats are summarized in tables 5, 6, 7 and 8. Mode registers 1 and 2 define the general operational characteristics of the EPCI, while the command register controls the operation within this basic framework. The EPCI indicates its status in the status register. These registers are cleared when a RESET input is applied.

Mode Register 1 (MR1)

Table 5 illustrates Mode Register 1. Bits MR11 and MR10 select the communication format and baud rate multiplier. 00 specifies synchronous mode and 1X multiplier. 1X, 16X, and 64X multipliers are programmable for asynchronous format. However, the multiplier in asynchronous format applies only if the external clock input option is selected by MR24 or MR25.

MR13 and MR12 select a character length of 5, 6, 7 or 8 bits. The character length does not include the parity bit, if programmed, and does not include the start and stop bits in asynchronous mode.

MR14 controls parity generation. If enabled, a parity bit is added to the transmitted character and the receiver performs a parity check on incoming data. MR15 selects odd or even parity when parity is enabled by MR14.

In asynchronous mode, MR17 and MR16 select character framing of 1, 1.5, or 2 stop bits. (If 1X baud rate is programmed, 1.5 stop bits defaults to 1 stop bits on transmit.) In synchronous mode, MR17 controls the number of SYN characters used to establish synchronization and for character fill when the transmitter is idle. SYN1 alone is used if MR17 = 1, and SYN1-SYN2 is used when MR17 = 0. If the transparent mode is specified by MR16, DLE-SYN1 is used for character fill and SYN detect, but the normal synchronization sequence is used to establish character sync. When transmitting, a DLE character in the transmit holding register will cause a second DLE character to be transmitted. This DLE stuffing eliminates the software DLE compare and stuff on each transparent mode data character. If the send DLE command (CR3) is active when a DLE is loaded into THR, only one additional DLE will be transmitted. Also, DLE stripping and DLE detect (with MR14 = 0) are enabled.

The bits in the mode register affecting character assembly and disassembly (MR12-MR16) can be changed dynamically (during active receive/transmit operation). The character mode register affects both the transmitter and receiver; therefore in synchronous mode, changes should be made only in half duplex mode (RxEN = 1 or TxEN = 1, but not both simultaneously = 1). In asynchronous mode, character changes should be made when RxEN and TxEN=0 or when TxEN = 1 and the transmitter is marking in half duplex mode (RxEN = 0).

To effect assembly/disassembly of the next received/transmitted character, MR12-15 must be changed within n bit times of the active going state of $\overline{RxRDY}$/$\overline{TxRDY}$. Transparent and non-transparent mode changes (MR16) must occur within n-1 bit times of the character to be affected when the receiver or transmitter is active. (n = smaller of the new and old character lengths.)

Mode Register 2 (MR2)

Table 6 illustrates mode register 2. MR23, MR22, MR21 and MR20 control the frequency of the internal baud rate generator (BRG). Sixteen rates are selectable for each EPCI version (−1, −2, −3). Version 1 and 2 specify a 4.9152 MHz TTL input at BRCLK (pin 20); version 3 specifies a 5.0688 MHz input which is identical to the Signetics 2651. MR23-20 are don't cares if external clocks are selected (MR25-MR24 = 0). The individual rates are given in table 1.

MR24-MR27 select the receive and transmit clock source (either the BRG or an external input) and the function at pins 9 and 25. Refer to table 6.

Command Register (CR)

Table 7 illustrates the command register. Bits CR0 (TxEN) and CR2 (RxEN) enable or disable the transmitter and receiver respectively. A 0 to 1 transition of CR2 forces start bit search (async mode) or hunt mode (sync mode) on the second $\overline{RxC}$ rising edge. Disabling the receiver causes $\overline{RxRDY}$ to go high (inactive). If the transmitter is disabled, it will complete the transmission of the character in the transmit shift register (if any) prior to terminating operation. The TxD output will then remain in the marking state

Table 5 MODE REGISTER 1 (MR 1)

MR17 MR16		MR15	MR14	MR13 MR12	MR11 MR10
Sync/Async		Parity Type	Parity Control	Character Length	Mode and Baud Rate Factor
Async: Stop Bit Length 00 = Invalid 01 = 1 stop bit 10 = 1½ stop bits 11 = 2 stop bits		0 = Odd 1 = Even	0 = Disabled 1 = Enabled	00 = 5 bits 01 = 6 bits 10 = 7 bits 11 = 8 bits	00 = Synchronous 1X rate 01 = Asynchronous 1X rate 10 = Asynchronous 16X rate 11 = Asynchronous 64X rate
Sync: Number of SYN char 0 = Double SYN 1 = Single SYN	**Sync: Transparency Control** 0 = Normal 1 = Transparent				

NOTE
Baud rate factor in asynchronous applies only if external clock is selected. Factor is 16X if internal clock is selected. Mode must be selected (MR11, MR10) in any case.

Table 6 MODE REGISTER 2 (MR2)

MR27–MR24											MR23–MR20
	TxC	RxC	Pin 9	Pin 25		TxC	RxC	Pin 9	Pin 25	Mode	Baud Rate Selection
0000	E	E	TxC	RxC	1000	E	E	XSYNC[1]	RxC/TxC	sync	See baud rates in table 1
0001	E	I	TxC	1X	1001	E	I	TxC	BKDET	async	
0010	I	E	1X	RxC	1010	I	E	XSYNC[1]	RxC	sync	
0011	I	I	1X	1X	1011	I	I	1X	BKDET	async	
0100	E	E	TxC	RxC	1100	E	E	XSYNC[1]	RxC/TxC	sync	
0101	E	I	TxC	16X	1101	E	I	TxC	BKDET	async	
0110	I	E	16X	RxC	1110	I	E	XSYNC[1]	RxC	sync	
0111	I	I	16X	16X	1111	I	I	16X	BKDET	async	

NOTES
1 When pin 9 is programmed as XSYNC input, SYN1, SYN1-SYN2, and DLE-SYN1 detection is disabled
E = External clock
I = Internal clock (BRG)
1X and 16X are clock outputs

Table 7 COMMAND REGISTER (CR)

CR7 CR6	CR5	CR4	CR3	CR2	CR1	CR0
Operating Mode	Request To Send	Reset Error	Sync/Async	Receive Control (RxEN)	Data Terminal Ready	Transmit Control (TxEN)
00 = Normal operation 01 = Async: Automatic echo mode Sync: SYN and/or DLE stripping mode 10 = Local loop back 11 = Remote loop back	0 = Force $\overline{RTS}$ output high one clock time after TxSR serialization 1 = Force $\overline{RTS}$ output low	0 = Normal 1 = Reset error flags in status register (FE, OE, PE/DLE detect.)	Async: Force break 0 = Normal 1 = Force break Sync: Send DLE 0 = Normal 1 = Send DLE	0 = Disable 1 = Enable	0 = Force $\overline{DTR}$ output high 1 = Force $\overline{DTR}$ output low (Not applicable in 24-pin version.)	0 = Disable 1 = Enable

Table 8 STATUS REGISTER (SR)

SR7	SR6	SR5	SR4	SR3	SR2	SR1	SR0
Data Set Ready	Data Carrier Detect	FE/SYN Detect	Overrun	PE/DLE Detect	TxEMT/DSCHG	RxRDY	TxRDY
0 = $\overline{DSR}$ input is high 1 = $\overline{DSR}$ input is low (Should be ignored in 24-pin version.)	0 = $\overline{DCD}$ input is high 1 = $\overline{DCD}$ input is low	Async: 0 = Normal 1 = Framing Error Sync: 0 = Normal 1 = SYN detected	0 = Normal 1 = Overrun Error	Async: 0 = Normal 1 = Parity error Sync: 0 = Normal 1 = Parity error or DLE received	0 = Normal 1 = Change in $\overline{DSR}$ (28-pin version only), or $\overline{DCD}$, or transmit shift register is empty	0 = Receive holding register empty 1 = Receive holding register has data	0 = Transmit holding register busy 1 = Transmit holding register empty

(high) while $\overline{TxRDY}$ and $\overline{TxEMT}$ will go high (inactive). If the receiver is disabled, it will terminate operation immediately. Any character being assembled will be neglected. A 0 to 1 transition of CR2 will initiate start bit search (async) or hunt mode (sync).

Bits CR1 (28-pin only) (DTR) and CR5 (RTS) control the $\overline{DTR}$ and $\overline{RTS}$ outputs. Data at the outputs are the logical complement of the register data.

In asynchronous mode, setting CR3 will force and hold the TxD output low (spacing condition) at the end of the current transmitted character. Normal operation resumes when CR3 is cleared. The TxD line will go high for at least one bit time before beginning transmission of the next character in the transmit data holding register. In synchronous mode, setting CR3 causes the transmission of the DLE register contents prior to sending the character in the transmit data holding register. Since this is a one time command, CR3 does not have to be reset by software. CR3 should be set when entering and exiting transparent mode and for all DLE—non-DLE character sequences.

Setting CR4 causes the error flags in the status register (SR3, SR4, and SR5) to be cleared. This is a one time command. There is no internal latch for this bit.

Table 9 SCN2661 EPCI vs SCN2651 PCI

FEATURE	EPCI	PCI
1. MR2 Bit 6, 7	Control pin 9, 25	Not used
2. DLE detect-SR3	SR3 = 0 for DLE-DLE, DLE-SYNC1	SR3 = 1 for DLE-DLE, DLE-SYNC1
3. Reset of SR3, DLE detect	Second character after DLE, or receiver disable, or CR4 = 1	Receiver disable, or CR4 = 1
4. Send DLE-CR3	One time command	Reset via CR3 on next $\overline{TxRDY}$
5. DLE stuffing in transparent mode	Automatic DLE stuffing when DLE is loaded except if CR3 = 1	None
6. SYNC1 stripping in double sync non-transparent mode	All SYNC1	First SYNC1 of pair
7. Baud rate versions	Three	One
8. Terminate ASYNC transmission (drop RTS)	Reset CR5 in response to $\overline{TxRDY}$ changing from 1 to 0	Reset CR0 when $\overline{TxEMT}$ goes from 1 to 0. Then reset CR5 when $\overline{TxEMT}$ goes from 0 to 1
9. Break detect	Pin 25[1]	FE and null character
10. Stop bit searched	One	Two
11. External jam sync	Pin 9[2]	No
12. Data bus timing	Improved over 2651	—
13. Data bus drivers	Sink 2.2mA	Sink 1.6mA
	Source 400μA	Source 100μA

NOTES
1. Internal BRG used for RxC
2. Internal BRG used for TxC

When CR5 (RTS) is set, the $\overline{RTS}$ pin is forced low. A 1 to 0 transition of CR5 will cause $\overline{RTS}$ to go high (inactive) one TxC time after the last serial bit has been transmitted (if the transmit shift register was not empty).

The EPCI can operate in one of four sub-modes within each major mode (synchronous or asynchronous). The operational sub-mode is determined by CR7 and CR6. CR7-CR6 = 00 is the normal mode, with the transmitter and receiver operating independently in accordance with the mode and status register instructions.

In asynchronous mode, CR7-CR6 = 01 places the EPCI in the automatic echo mode. Clocked, regenerated received data are automatically directed to the TxD line while normal receiver operation continues. The receiver must be enabled (CR2 = 1), but the transmitter need not be enabled. CPU to receiver communications continues normally, but the CPU to transmitter link is disabled. Only the first character of a break condition is echoed. The TxD output will go high until the next valid start is detected. The following conditions are true while in automatic echo mode:

1. Data assembled by the receiver are automatically placed in the transmit holding register and retransmitted by the transmitter on the TxD output.
2. The transmitter is clocked by the receive clock.
3. $\overline{TxRDY}$ output = 1.
4. The $\overline{TxEMT}$/$\overline{DSCHG}$ pin will reflect only the data set change condition.
5. The TxEN command (CR0) is ignored.

In synchronous mode, CR7-CR6 = 01 places the EPCI in the automatic SYN/DLE stripping mode. The exact action taken depends on the setting of bits MR17 and MR16:

1. In the non-transparent, single SYN mode (MR17-MR16 = 10), characters in the data stream matching SYN1 are not transferred to the receiver data holding register (RHR).
2. In the non-transparent, double SYN mode (MR17-MR16 = 00), characters in the data stream matching SYN1, or SYN2 if immediately preceded by SYN1, are not transferred to the RHR.
3. In transparent mode (MR16 = 1), characters in the data stream matching DLE, or SYN1 if immediately preceded by DLE, are not transferred to the RHR. However, only the first DLE of a DLE-DLE pair is stripped.

Note that automatic stripping mode does not affect the setting of the DLE detect and SYN detect status bits (SR3 and SR5).

Two diagnostic sub-modes can also be configured. In local loop back mode (CR7-CR6 = 10), the following loops are connected internally:

1. The transmitter output is connected to the receiver input.
2. $\overline{DTR}$ is connected to $\overline{DCD}$ and $\overline{RTS}$ is connected to $\overline{CTS}$.
3. The receiver is clocked by the transmit clock.
4. The $\overline{DTR}$, $\overline{RTS}$ and $\overline{TxD}$ outputs are held high.
5. The $\overline{CTS}$, $\overline{DCD}$, $\overline{DSR}$ and RxD inputs are ignored.

Additional requirements to operate in the local loop back mode are that CR0 (TxEN), CR1 (DTR), and CR5 (RTS) must be set to 1. CR2 (RxEN) is ignored by the EPCI.

The second diagnostic mode is the remote loop back mode (CR7-CR6 = 11). In this mode:

1. Data assembled by the receiver are automatically placed in the transmit holding register and retransmitted by the transmitter on the TxD output.
2. The transmitter is clocked by the receive clock.
3. No data are sent to the local CPU, but the error status conditions (PE, FE) are set.
4. The $\overline{RxRDY}$, $\overline{TxRDY}$, and $\overline{TxEMT}$/$\overline{DSCHG}$ outputs are held high.
5. CR1 (TxEN) is ignored.
6. All other signals operate normally.

Status Register

The data contained in the status register (as shown in table 8) indicate receiver and transmitter conditions and modem/data set status.

SR0 is the transmitter ready (TxRDY) status bit. It, and its corresponding output, are valid only when the transmitter is enabled. If equal to 0, it indicates that the transmit data holding register has been loaded by the CPU and the data has not been transferred to the transmit shift register. If set equal to 1, it indicates that the holding register is ready to accept data from the CPU. This bit is initially set when the transmitter is enabled by CR0, unless a character has previously been loaded into the holding register. It is not set when the automatic echo or remote loopback modes are programmed. When this bit is set, the $\overline{TxRDY}$ output pin is low. In

the automatic echo and remote loop back modes, the output is held high.

SR1, the receiver ready (RxRDY) status bit, indicates the condition of the receive data holding register. If set, it indicates that a character has been loaded into the holding register from the receive shift register and is ready to be read by the CPU. If equal to zero, there is no new character in the holding register. This bit is cleared when the CPU reads the receive data holding register or when the receiver is disabled by CR2. When set, the $\overline{RxRDY}$ output is low.

The TxEMT/DSCHG bit, SR2, when set, indicates either a change of state of the $\overline{DSR}$ (28-pin only) or $\overline{DCD}$ inputs (when CR2 or CR0 = 1) or that the transmit shift register has completed transmission of a character and no new character has been loaded into the transmit data holding register. Note that in synchronous mode this bit will be set even though the appropriate "fill" character is transmitted. TxEMT will not go active until at least one character has been transmitted. It is cleared by loading the transmit data holding register. The DSCHG condition is enabled when TxEN = 1 or RxEN = 1. It is cleared when the status register is read by the CPU. If the status register is read twice and SR2 = 1 while SR6 and SR7 remain unchanged, then a TxEMT condition exists. When SR2 is set, the $\overline{TxEMT}$/$\overline{DSCHG}$ output is low.

SR3, when set, indicates a received parity error when parity is enabled by MR14. In synchronous transparent mode (MR16 = 1), with parity disabled, it indicates that a character matching DLE register was received and the present character is neither SYN1 nor DLE. This bit is cleared when the next character following the above sequence is loaded into RHR, when the receiver is disabled, or by a reset error command, CR4.

The overrun error status bit, SR4, indicates that the previous character loaded into the receive holding register was not read by the CPU at the time a new received character was transferred into it. This bit is cleared when the receiver is disabled or by the reset error command, CR4.

In asynchronous mode, bit SR5 signifies that the received character was not framed by a stop bit, i.e., only the first stop bit is checked. If RHR = 0 when SR5 = 1, a break condition is present. In synchronous non-transparent mode (MR16 = 0), it indicates receipt of the SYN1 character in single SYN mode or the SYN1-SYN2 pair in double SYN mode. In synchronous transparent mode (MR16 = 1), this bit is set upon detection of the initial synchronizing characters (SYN1 or SYN1-SYN2) and, after synchronization has been achieved, when a DLE-SYN1 pair is received. The bit is reset when the receiver is disabled, when the reset error command is given in asynchronous mode, or when the status register is read by the CPU in the synchronous mode.

SR6 and SR7 (28-pin only) reflect the conditions of the $\overline{DCD}$ and $\overline{DSR}$ inputs respectively. A low input sets its corresponding status bit, and a high input clears it.

ABSOLUTE MAXIMUM RATINGS[1]

PARAMETER	RATING	UNIT
Operating ambient temperature[2]	Note 4	°C
Storage temperature	−65 to +150	°C
All voltages with respect to ground[3]	−0.5 to +6.0	V

DC ELECTRICAL CHARACTERISTICS[4,5,6]

	PARAMETER	TEST CONDITIONS	LIMITS			UNIT
			Min	Typ	Max	
	Input voltage					V
V_{IL}	Low				0.8	
V_{IH}	High		2.0			
	Output voltage					V
V_{OL}	Low	I_{OL} = 2.2mA			0.4	
V_{OH}[7]	High	I_{OH} = −400μA	2.4			
I_{IL}	Input leakage current	V_{IN} = 0 to 5.5 V			10	μA
	3-state output leakage current					μA
I_{LH}	Data bus high	V_O = 4.0V			10	
I_{LL}	Data bus low	V_O = 0.45V			10	
I_{CC}	Power supply current				150	mA

CAPACITANCE T_A = 25°C, V_{CC} = 0V

	PARAMETER	TEST CONDITIONS	LIMITS			UNIT
			Min	Typ	Max	
	Capacitance					pF
C_{IN}	Input				20	
C_{OUT}	Output	fc = 1MHz			20	
$C_{I/O}$	Input/Output	Unmeasured pins tied to ground			20	

Notes on following page

ACC ELECTRICAL CHARACTERISTICS[4,5,6]

	PARAMETER	TEST CONDITIONS	Min	Typ	Max	UNIT
	Pulse width					ns
t_{RRES}	Reset		1000			
t_{CCE}	Chip enable		250			
	Setup and hold time					ns
t_{AAS}	Address setup		10			
t_{AAH}	Address hold		10			
t_{CCS}	$\overline{R}$/W control setup		10			
t_{CCH}	$\overline{R}$/W control hold		10			
t_{DDS}	Data setup for write		150			
t_{DDH}	Data hold for write		10			
t_{RRXS}	Rx data setup		300			
t_{RRXH}	Rx data hold		350			
t_{DDD}	Data delay time for read	C_L = 150pF			200	ns
t_{DDF}	Data bus floating time for read	C_L = 150pF			100	
t_{CCED}	CE to CE delay		600			
	Input clock frequency					MHz
f_{BBRG}	Baud rate generator (2661A,B)		1.0	4.9152	4.9202	
f_{BBRG}	Baud rate generator (2661C)		1.0	5.0688	5.0738	
$f_{R/T}$[10]	$\overline{TxC}$ or $\overline{RxC}$		dc		1.0	
	Clock width					ns
t_{BBRH}[9]	Baud rate high (2661A,B)		75			
t_{BBRH}[9]	Baud rate high (2661C)		70			
t_{BBRL}[9]	Baud rate low (2661A,B)		75			
t_{BBRL}[9]	Baud rate low (2661C)		70			
$t_{RR/TH}$	$\overline{TxC}$ or $\overline{RxC}$ high		480			
$t_{R/RTL}$[10]	$\overline{TxC}$ or $\overline{RxC}$ low		480			
t_{TTTXD}	TxD delay from falling edge of $\overline{TxC}$	C_L = 150pF			650	ns
t_{TTCS}	Skew between TxD changing and falling edge of $\overline{TxC}$ output[8]	C_L = 150pF		0		

OTES

1. Stresses above those listed under Absolute Maximum Ratings may cause permanent damage to the device. This is a stress rating only and functional operation of the device at these or at any other condition above those indicated in the operation section of this specification is not implied.
2. For operating at elevated temperatures, the device must be derated based on + 150°C maximum junction temperature.
3. This product includes circuitry specifically designed for the protection of its internal devices from the damaging effects of excessive static charge. Nonetheless, it is suggested that conventional precautions be taken to avoid applying any voltages larger than the rated maxima.
4. Parameters are valid over operating temperature range unless otherwise specified. See ordering code table for applicable temperature range and operating supply range.
5. All voltage measurements are referenced to ground. All time measurements are at the 50% level for inputs (except t_{BRH} and t_{BRL}) and at 0.8V and 2.0V for outputs. Input levels swing between 0.4V and 2.4V, with a transition time of 20ns maximum.
6. Typical values are at +20°C, typical supply voltages and typical processing parameters.
7. INTR, $\overline{TxRDY}$, $\overline{RxRDY}$ and $\overline{TxEMT}$/$\overline{DSCHG}$ outputs are open drain.
8. Parameter applies when internal transmitter clock is used.
9. Under test conditions of 5.0688MHz f_{BRG} (2661C) and 4.9152MHz f_{BRG} (2661A,B). t_{BRH} and t_{BRL} measured at V_{IH} and V_{IL} respectively.
10. In asynchronous local loopback mode, using 1X clock, the following parameters apply:
    $f_{R/T}$ = 0.83MHz max.
    $t_{R/TL}$ = 700ns min.

TIMING DIAGRAMS

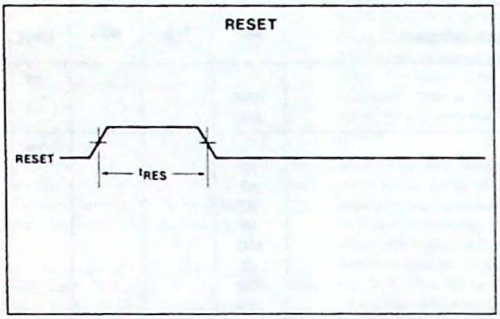

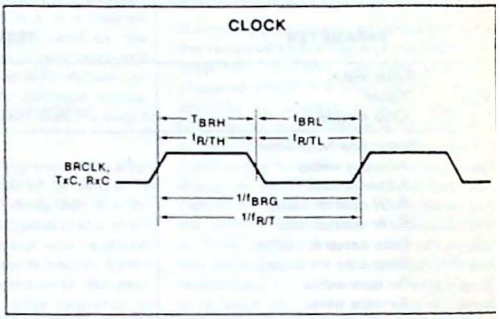

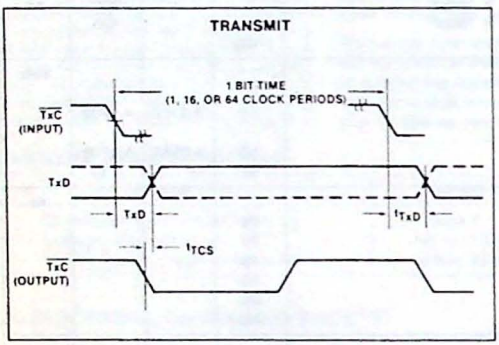

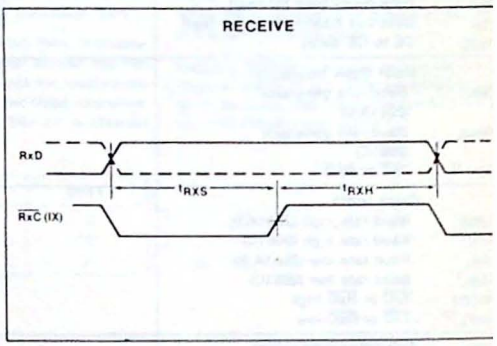

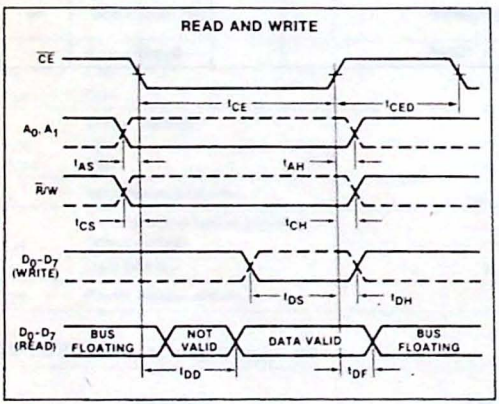

TIMING DIAGRAMS (Cont'd)

TxRDY, TxEMT (Shown for 5-bit characters, no parity, 2 stop bits [in asynchronous mode])

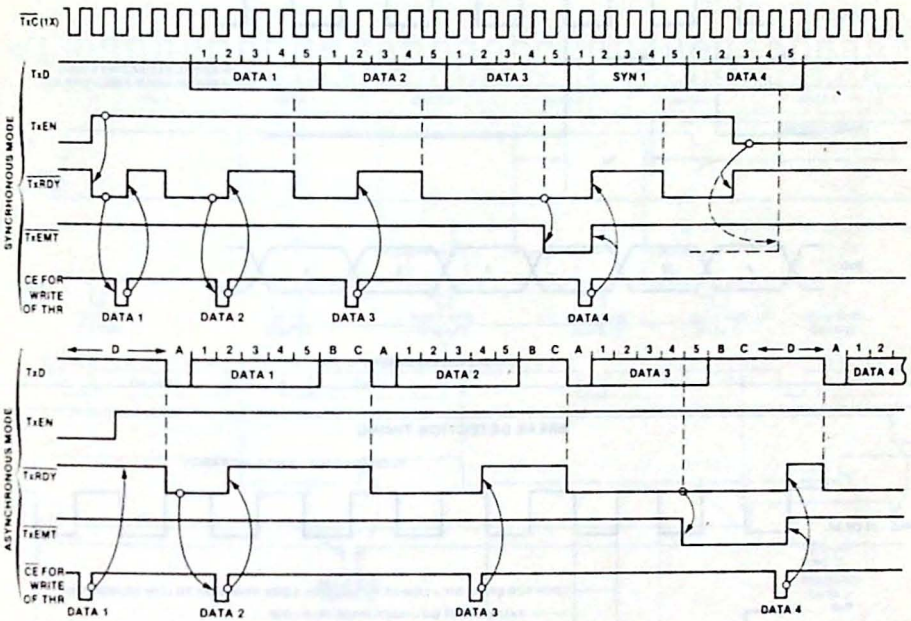

NOTES
A = Start bit
B = Stop bit 1
C = Stop bit 2
D = TxD marking condition
TxrxEMT goes low at the beginning of the last data bit, or, if parity is enabled, at the beginning of the parity bit

TIMING DIAGRAMS (Cont'd)

EXTERNAL SYNCHRONIZATION WITH XSYNC

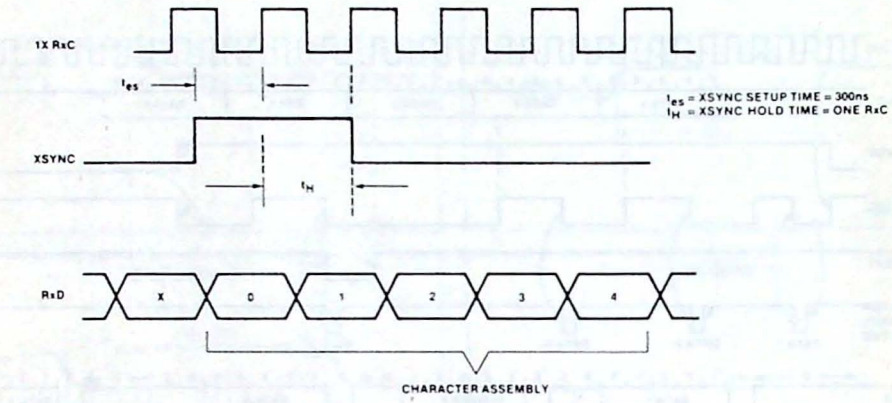

BREAK DETECTION TIMING

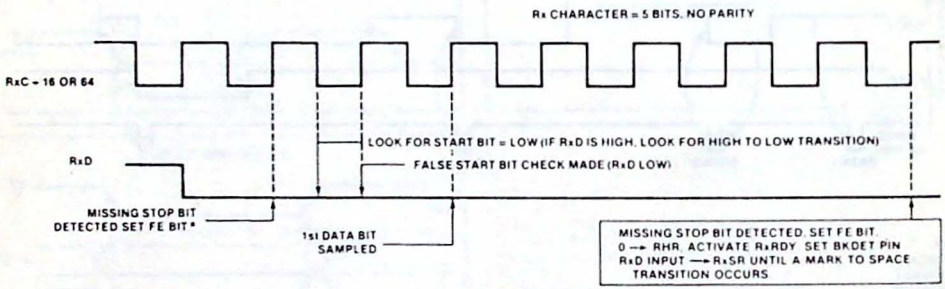

NOTE
* If the stop bit is present, the start bit search will commence immediately

TIMING DIAGRAMS (Cont'd)

RxRDY (Shown for 5-bit characters, no parity, 2 stops bits [in asynchronous mode])

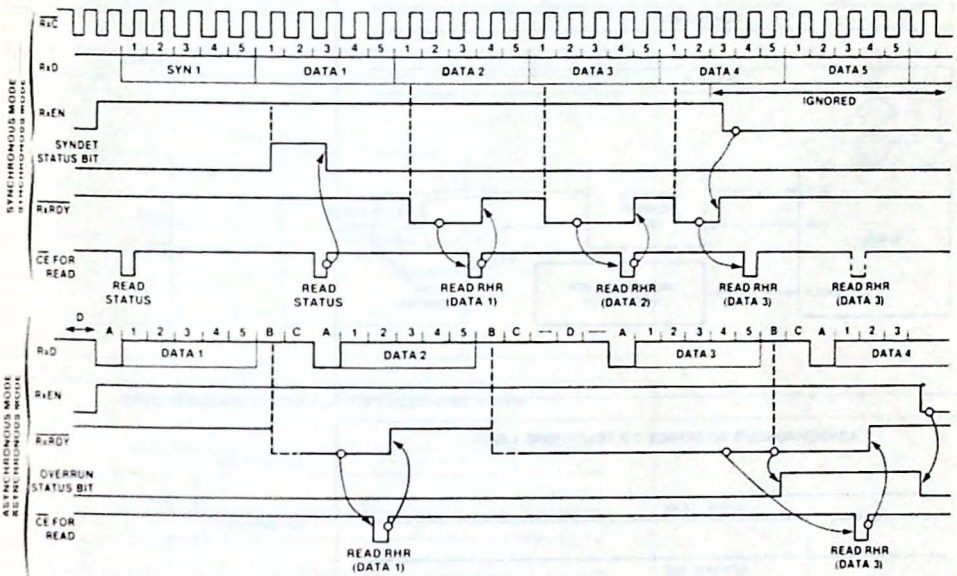

NOTES
A = Start bit
B = Stop bit 1
C = Stop bit 2
D = TxD marking condition
Only one stop bit is detected

TYPICAL APPLICATIONS

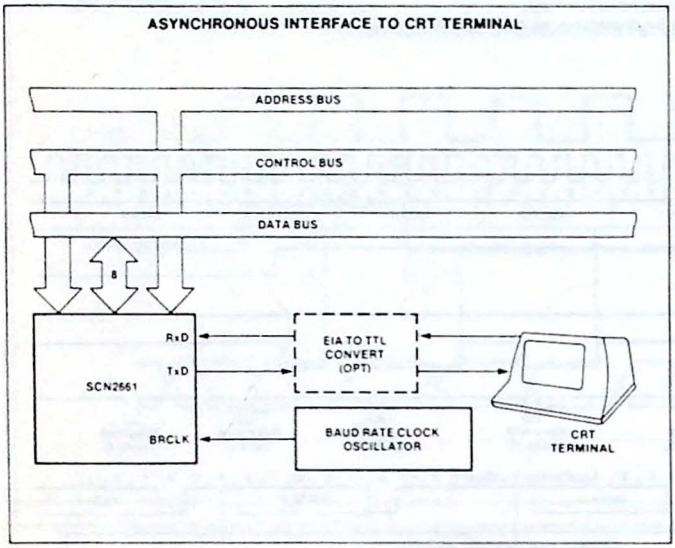

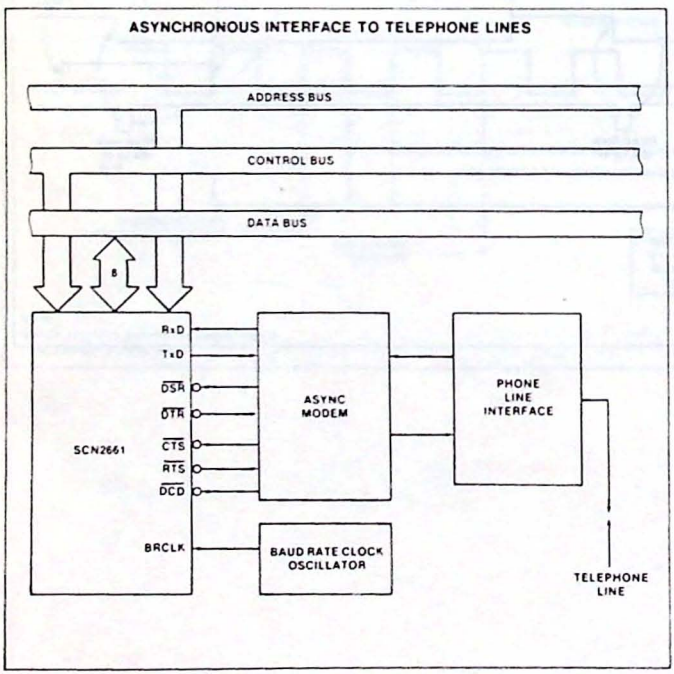

TYPICAL APPLICATIONS (Cont'd)

SYNCHRONOUS INTERFACE TO TERMINAL OR PERIPHERAL DEVICE

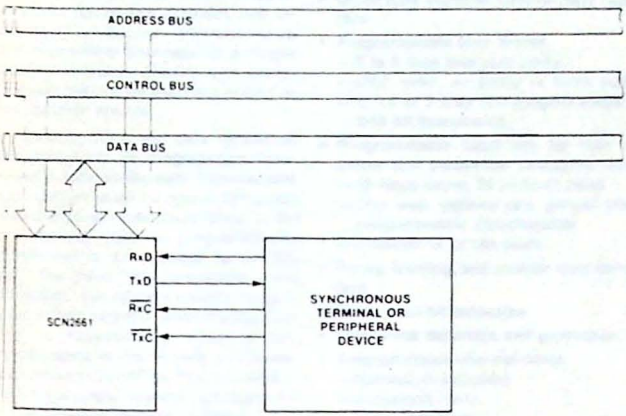

SYNCHRONOUS INTERFACE TO TELEPHONE LINES

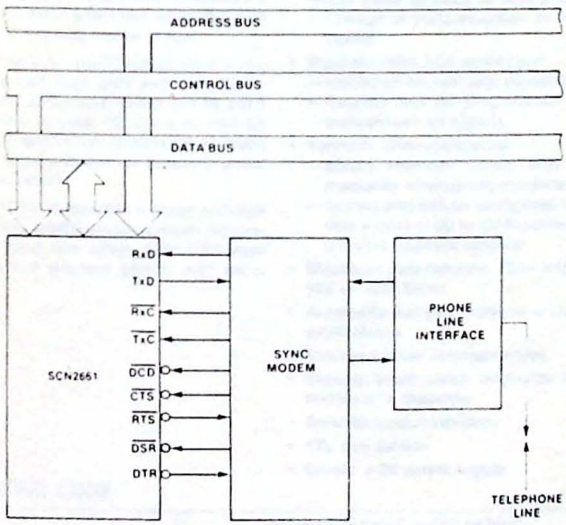

Preliminary

DESCRIPTION

The Signetics SCN2681 Dual Universal Asynchronous Receiver/Transmitter (DUART) is a single chip MOS-LSI communications device that provides two independent full-duplex asynchronous receiver/transmitter channels in a single package. It interfaces directly with microprocessors and may be used in a polled or interrupt driven system.

The operating mode and data format of each channel can be programmed independently. Additionally, each receiver and transmitter can select its operating speed as one of eighteen fixed baud rates, a 16x clock derived from a programmable counter/timer, or an external 1x or 16x clock. The baud rate generator and counter/timer can operate directly from a crystal or from external clock inputs. The ability to independently program the operating speed of the receiver and transmitter make the DUART particularly attractive for dual-speed channel applications such as clustered terminal systems.

Each receiver is quadruply buffered to minimize the potential of receiver overrun or to reduce interrupt overhead in interrupt driven systems. In addition, a flow control capability is provided to disable a remote DUART transmitter when the buffer of the receiving device is full.

Also provided on the SCN2681 are a multipurpose 7-bit input port and a multipurpose 8-bit output port. These can be used as general purpose I/O ports or can be assigned specific functions (such as clock inputs or status/interrupt outputs) under program control.

The SCN2681 is available in three package versions to satisfy various system requirements: 40-pin and 28-pin, both 0.6" wide DIPs, and a compact 24-pin, 0.4" wide, DIP.

FEATURES

- Dual full-duplex asynchronous receiver/transmiter
- Quadruple buffered receiver data registers
- Programmable data format
  - —5 to 8 data bits plus parity
  - —Odd, even, no parity or force parity
  - —1, 1.5 or 2 stop bits programmable in 1/16 bit increments
- Programmable baud rate for each receiver and transmiter selectable from:
  - —18 fixed rates: 50 to 38.4K baud
  - —One user defined rate derived from programmable timer/counter
  - —External 1x or 16x clock
- Parity, framing, and overrun error detection
- False start bit detection
- Line break detection and generation
- Programmable channel mode
  - —Normal (full duplex)
  - —Automatic echo
  - —Local loopback
  - —Remote loopback
- Multi-function programmable 16-bit counter/timer
- Multi-function 7-bit input port
  - —Can serve as clock or control inputs
  - —Change of state detection on four inputs
- Multi-function 8-bit output port
  - —Individual bit set/reset capability
  - —Outputs can be programmed to be status/interrupt signals
- Versatile interrupt system
  - —Single interrupt output with eight maskable interrupting conditions
  - —Output port can be configured to provide a total of up to six separate wire-OR'able interrupt outputs
- Maximum data transfer: 1X — 1MB/sec, 16X — 125KB/sec
- Automatic wake-up mode for multidrop applications
- Start-end break interrupt/status
- Detects break which originates in the middle of a character
- On-chip crystal oscillator
- TTL compatible
- Single +5V power supply

PIN CONFIGURATION

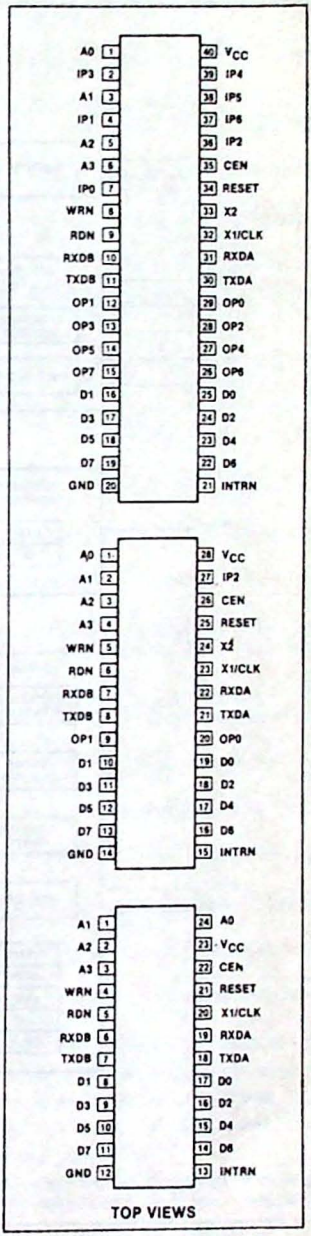

TOP VIEWS

ORDERING CODE

PACKAGES	$V_{CC} = 5V \pm 5\%$, $T_A = 0°C$ to $70°C$		
	24 Pin[1]	28 Pin[2]	40 Pin[2]
Ceramic DIP	Not available	SCN2681AC1I28	SCN2681AC1I40
Plastic DIP	SCN2681AC1N24	SCN2681AC1N28	SCN2681AC1N40

1) 300 mil wide DIP
2) 600 mil wide DIP

Preliminary

BLOCK DIAGRAM

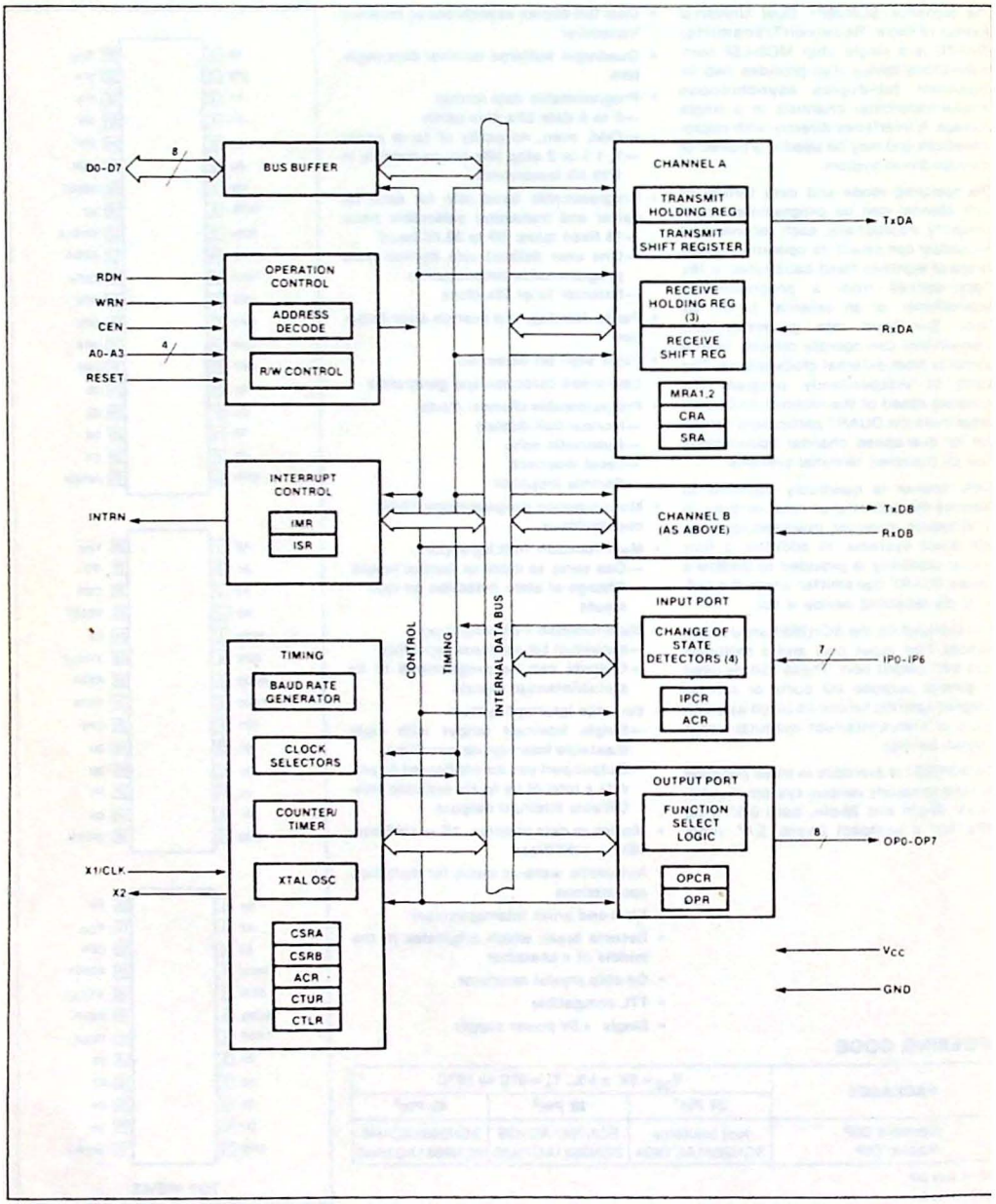

Preliminary

PIN DESIGNATION

MNEMONIC	APPLICABLE			TYPE	NAME AND FUNCTION
	40	28	24		
D0-D7	X	X	X	I/O	**Data Bus:** Bidirectional 3-state data bus used to transfer commands, data and status between the DUART and the CPU. D0 is the least significant bit.
CEN	X	X	X	I	**Chip Enable:** Active low input signal. When low, data transfers between the CPU and the DUART are enabled on D0-D7 as controlled by the WRN, RDN and A0-A3 inputs. When high, places the D0-D7 lines in the 3-state condition.
WRN	X	X	X	I	**Write Strobe:** When low and CEN is also low, the contents of the data bus is loaded into the addressed register. The transfer occurs on the rising edge of the signal.
RDN	X	X	X	I	**Read Strobe:** When low and CEN is also low, causes the contents of the addressed register to be presented on the data bus. The read cycle begins on the falling edge of RDN.
A0-A3	X	X	X	I	**Address Inputs:** Select the DUART internal registers and ports for read/write operations.
RESET	X	X	X	I	**Reset:** A high level clears internal registers (SRA, SRB, IMR, ISR, OPR, OPCR), puts OP0-OP7 in the high state, stops the counter/timer, and puts channels A and B in the inactive state, with the TxDA and TxDB outputs in the mark (high) state.
INTRN	X	X	X	O	**Interrupt Request:** Active low, open drain, output which signals the CPU that one or more of the eight maskable interrupting conditions are true.
X1/CLK	X	X	X	I	**Crystal 1:** Crystal or external clock input. A crystal or clock of the specified limits must be supplied at all times. When a crystal is used, a capacitor of approximately 15-20 pF must be connected from this pin to ground.
X2	X	X		O	**Crystal 2:** Connection for other side of the crystal. Should be connected to ground if a crystal is not used. When a crystal is used, a capacitor of approximately 15-20pF must be connected from this pin to ground.
RxDA	X	X	X	I	**Channel A Receiver Serial Data Input:** The least significant bit is received first. 'Mark' is high, 'space' is low.
RxDB	X	X	X	I	**Channel B Receiver Serial Data Input:** The least significant bit is received first. 'Mark' is high, 'space' is low.
TxDA	X	X	X	O	**Channel A Transmitter Serial Data Output:** The least significant bit is transmitted first. This output is held in the 'mark' condition when the transmitter is disabled, idle, or when operating in local loopback mode. 'Mark' is high, 'space' is low.
TxDB	X	X	X	O	**Channel B Transmitter Serial Data Output:** The least significant bit is transmitted first. This output is held in the 'mark' condition when the transmitter is disabled, idle, or when operating in local loopback mode. 'Mark' is high, 'space' is low.
OP0	X	X		O	**Output 0:** General purpose output, or channel A request to send (RTSAN, active low). Can be deactivated on receive or transmit.
OP1	X	X		O	**Output 1:** General purpose output, or channel B request to send (RTSBN, active low). Can be deactivated on receive or transmit.
OP2	X			O	**Output 2:** General purpose output, or channel A transmitter 1X or 16X clock output, or channel A receiver 1X clock output.
OP3	X			O	**Output 3:** General purpose output, or open drain, active low counter/timer output, or channel B transmitter 1X clock output, or channel B receiver 1X clock output.
OP4	X			O	**Output 4:** General purpose output, or channel A open drain, active low, RxRDYA/FFULLA output.
OP5	X			O	**Output 5:** General purpose output, or channel B open drain, active low, RxRDYB/FFULLB output.
OP6	X			O	**Output 6:** General purpose output, or channel A open drain, active low, TxRDYA output.
OP7	X			O	**Output 7:** General purpose output, or channel B open drain, active low, TxRDYB output.
IP0	X			I	**Input 0:** General purpose input, or channel A clear to send active low input (CTSAN).
IP1	X			I	**Input 1:** General purpose input, or channel B clear to send active low input (CTSBN).
IP2	X	X		I	**Input 2:** General purpose input, or counter/timer external clock input.
IP3	X			I	**Input 3:** General purpose input, or channel A transmitter external clock input (TxCA). When the external clock is used by the transmitter, the transmitted data is clocked on the falling edge of the clock.

Preliminary

PIN DESIGNATION (Continued)

MNEMONIC	APPLICABLE			TYPE	NAME AND FUNCTION
	40	28	24		
IP4	X			I	**Input 4:** General purpose input, or channel A receiver external clock input (RxCA). When the external clock is used by the receiver, the received data is sampled on the rising edge of the clock.
IP5	X			I	**Input 5:** General purpose input, or channel B transmitter external clock input (TxCB). When the external clock is used by the transmitter, the transmitted data is clocked on the falling edge of the clock.
IP6	X			I	**Input 6:** General purpose input or channel B receiver external clock input (RxCB). When the external clock is used by the receiver, the received data is sampled on the rising edge of the clock.
V_{CC}	X	X	X	I	**Power Supply:** + 5V supply input
GND	X	X	X	I	**Ground**

BLOCK DIAGRAM

The 2681 DUART consists of the following eight major sections: data bus buffer, operation control, interrupt control, timing, communications channels A and B, input port and output port. Refer to the block diagram.

Data Bus Buffer

The data bus buffer provides the interface between the external and internal data busses. It is controlled by the operation control block to allow read and write operations to take place between the controlling CPU and the DUART.

Operation Control

The operation control logic receives operation commands from the CPU and generates appropriate signals to internal sections to control device operation. It contains address decoding and read and write circuits to permit communications with the microprocessor via the data bus buffer.

Interrupt Control

A single active low interrupt output (INTRN) is provided which is activated upon the occurence of any of eight internal events. Associated with the interrupt system are the interrupt mask register (IMR) and the interrupt status register (ISR). The IMR may be programmed to select only certain conditions to cause INTRN to be asserted. The ISR can be read by the CPU to determine all currently active interrupting conditions.

Outputs OP3–OP7 can be programmed to provide discrete interrupt outputs for the transmitters, receivers, and counter/timer.

Timing Circuits

The timing block consists of a crystal oscillator, a baud rate generator, a programmable 16-bit counter/timer, and four clock selectors. The crystal oscillator operates directly from a 3.6864MHz crystal connected across the X1/CLK and X2 inputs. If an external clock of the appropriate frequency is available, it may be connected to X1/CLK. The clock serves as the basic timing reference for the baud rate generator (BRG), the counter/timer, and other internal circuits. A clock signal within the limits specified in the specifications section of this data sheet must always be supplied to the DUART.

The baud rate generator operates from the oscillator or external clock input and is capable of generating 18 commonly used data communications baud rates ranging from 50 to 38.4K baud. The clock outputs from the BRG are at 16X the actual baud rate. The counter/timer can be used as a timer to produce a 16X clock for any other baud rate by counting down the crystal clock or an external clock. The four clock selectors allow the independent selection, for each receiver and transmitter, of any of these baud rates or an external timing signal.

The counter/timer (C/T) can be programmed to use one of several timing sources as its input. The output of the C/T is available to the clock selectors and can also be programmed to be output at OP3. In the counter mode, the contents of the C/T can be read by the CPU and it can be stopped and started under program control. In the timer mode, the C/T acts as a programmable divider.

Communications Channels A and B

Each communications channel of the 2681 comprises a full duplex asynchronous receiver/transmitter (UART). The operating frequency for each receiver and transmitter can be selected independently from the baud rate generator, the counter timer, or from an external input.

The transmitter accepts parallel data from the CPU, converts it to a serial bit stream, inserts the appropriate start, stop, and optional parity bits and outputs a composite serial stream of data on the TxD output pin. The receiver accepts serial data on the RxD pin, converts this serial input to parallel format, checks for start bit, stop bit, parity bit (if any), or break condition and sends an assembled character to the CPU.

Input Port

The inputs to this unlatched 7-bit port can be read by the CPU by performing a read operation at address D_{16}. A high input results in a logic 1 while a low input results in a logic 0. D_7 will always be read as a logic 1. The pins of this port can also serve as auxiliary inputs to certain portions of the DUART logic.

Four change-of-state detectors are provided which are associated with inputs IP3, IP2, IP1, and IP0. A high-to-low or low-to-high transition of these inputs lasting longer than 25–50μs will set the corresponding bit in the input port will change register. The bits are cleared when the register is read by the CPU. Any change of state can also be programmed to generate an interrupt to the CPU.

Preliminary

Output Port

The 8-bit multi-purpose output port can be used as a general purpose output port, in which case the outputs are the complements of the output port register (OPR). OPR[n] = 1 results in OP[n] = low and vice-versa. Bits of the OPR can be individually set and reset. A bit is set by performing a write operation at address E_{16} with the accompanying data specifying the bits to be set (1 = set, 0 = no change). Likewise, a bit is reset by a write at address F_{16} with the accompanying data specifying the bits to be reset (1 = reset, 0 = no change).

Outputs can be also individually assigned specific functions by appropriate programming of the channel A mode registers (MR1A, MR2A), the channel B mode registers (MR1B, MR2B), and the output port configuration register (OPCR).

OPERATION

Transmitter

The 2681 is conditioned to transmit data when the transmitter is enabled through the command register. The 2681 indicates to the CPU that it is ready to accept a character by setting the TxRDY bit in the status register. This condition can be programmed to generate an interrupt request at OP6 or OP7 and INTRN. When a character is loaded into the transmit holding register (THR), the above conditions are negated. Data is transferred from the holding register to the transmit shift register when it is idle or has completed transmission of the previous character. The TxRDY conditions are then asserted again which means one full character time of buffering is provided. Characters cannot be loaded into the THR while the transmitter is disabled.

The transmitter converts the parallel data from the CPU to a serial bit stream on the TxD output pin. It automatically sends a start bit followed by the programmed number of data bits, an optional parity bit, and the programmed number of stop bits. The least significant bit is sent first. Following the transmission of the stop bits, if a new character is not available in the THR, the TxD output remains high and the TxEMT bit in the status register (SR) will be set to 1. Transmission resumes and the TxEMT bit is cleared when the CPU loads a new character into the THR. If the transmitter is disabled, it continues operating until the character currently being transmitted is completely sent out. The transmitter can be forced to send a continuous low condition by issuing a send break command.

The transmitter can be reset through a software command. If it is reset, operation ceases immediately and the transmitter must be enabled through the command register before resuming operation. If CTS operation is enabled, the CTSN input must be low in order for the character to be transmitted. If it goes high in the middle of a transmission, the character in the shift register is transmitted and TxDA then remains in the marking state until CTSN goes low. The transmitter can also control the deactivation of the RTSN output. If programmed, the RTSN output will be reset one bit time after the character in the transmit shift register and transmit holding register (if any) are completely transmitted, if the transmitter has been disabled.

Receiver

The 2681 is conditioned to receive data when enabled through the command register. The receiver looks for a high to low (mark to space) transition of the start bit on the RxD input pin. If a transition is detected, the state of the RxD pin is sampled each 16X clock for 7-1/2 clocks (16X clock mode) or at the next rising edge of the bit time clock (1X clock mode). If RxD is sampled high, the start bit is invalid and the search for a valid start bit begins again. If RxD is still low, a valid start bit is assumed and the receiver continues to sample the input at one bit time intervals at the theoretical center of the bit, until the proper number of data bits and the parity bit (if any) have been assembled, and one stop bit has been detected. The least sigificant bit is received first. The data is then transferred to the receive holding register (RHR) and the RxRDY bit in the SR is set to a 1. This condition can be programmed to generate an interrupt at OP4 or OP5 and INTRN. If the character length is less than eight bits, the most significant unused bits in the RHR are set to zero.

After the stop bit is detected, the receiver will immediately look for the next start bit. However, if a non-zero character was received without a stop bit (framing error) and RxD remains low for one half of the bit period after the stop bit was sampled, then the receiver operates as if a new start bit transition had been detected at that point (one-half bit time after the stop bit was sampled).

The parity error, framing error, overrun error and received break state (if any) are strobed into the SR at the received character boundary, before the RxRDY status bit is set. If a break condition is detected (RxD is low for the entire character including the stop bit), a character consisting of all zeros will be loaded into the RHR and the received break bit in the SR is set to 1. The RxD input must return to a high condition for at least one-half bit time before a search for the next start bit begins.

The RHR consists of a first-in-first-out (FIFO) stack with a capacity of three characters. Data is loaded from the receive shift register into the topmost empty position of the FIFO. The RxRDY bit in the status register is set whenever one or more characters are available to be read, and a FFULL status bit is set if all three stack positions are filled with data. Either of these bits can be selected to cause an interrupt. A read of the RHR outputs the data at the top of the FIFO. After the read cycle, the data FIFO and its associated status bits (see below) are 'popped' thus emptying a FIFO position for new data.

In addition to the data word, three status bits (parity error, framing error, and received break) are also appended to each data character in the FIFO (overrun is not). Status can be provided in two ways, as programmed by the error mode control bit in the mode register. In the 'character' mode, status is provided on a character-by-character basis: the status applies only to the character at the top of the FIFO. In the 'block' mode, the status provided in the SR for these three bits is the logical OR of the status for all characters coming to the top of the FIFO since the last 'reset error' command was issued. In either mode reading the SR does not affect the FIFO. The FIFO is 'popped' only when the RHR is read. Therefore the status register should be read prior to reading the FIFO.

If the FIFO is full when a new character is received, that character is held in the receive shift register until a FIFO position is available. If an additional character is received while this state exits, the contents of the FIFO are not affected: the character previously in the shift register is lost and the overrun error status bit (SR[4]) will be set upon receipt of the start bit of the new (overruning) character.

The receiver can control the deactivation of RTS. If programmed to operate in this mode, the RTSN output will be negated when a valid start bit was received and the FIFO is full. When a FIFO position becomes available, the RTSN output will be re-asserted automatically. This feature can be used to prevent an overrun, in the

Preliminary

receiver, by connecting the RTSN output to the CTSN input of the transmitting device.

If the receiver is disabled, the FIFO characters can be read. However, no additional characters can be received until the receiver is enabled again. If the receiver is reset, the FIFO and all of the receiver status, and the corresponding output ports and interrupt are reset. No additional characters can be received until the receiver is enabled again.

Multidrop Mode

The DUART is equipped with a wake up mode used for multidrop applications. This mode is selected by programming bits MR1A[4:3] or MR1B[4:3] to '11' for channels A and B respectively. In this mode of operation, a 'master' station transmits an address character followed by data characters for the addressed 'slave' station. The slave stations, with receivers that are normally disabled, examine the received data stream and 'wake-up' the CPU (by setting RxRDY) only upon receipt of an address character. The CPU compares the received address to its station address and enables the receiver if it wishes to receive the subsequent data characters. Upon receipt of another address character, the CPU may disable the receiver to initiate the process again.

A transmitted character consists of a start bit, the programmed number of data bits, an address/data (A/D) bit, and the programmed number of stop bits. The polarity of the transmitted A/D bit is selected by the CPU by programming bit MR1A[2]/MR1B[2]. MR1A[2]/MR1B[2] = 0 transmits a zero in the A/D bit position, which identifies the corresponding data bits as data, while MR1A[2]/MR1B[2] = 1 transmits a one in the A/D bit position, which identifies the corresponding data bits as an address. The CPU should program the mode register prior to loading the corresponding data bits into the THR.

In this mode, the receiver continuously looks at the received data stream, whether it is enabled or disabled. If disabled, it sets the RxRDY status bit and loads the character into the RHR FIFO if the received A/D bit is a one (address tag), but discards the received character if the received A/D bit is a zero (data tag). If enabled, all received characters are transferred to the CPU via the RHR. In either case, the data bits are loaded into the data FIFO while the A/D bit is loaded into the status FIFO position normally used for parity error (SRA[5] or SRB[5]). Framing error, overrun error, and break detect operate normally whether or not the receiver is enabled.

PROGRAMMING

The operation of the DUART is programmed by writing control words into the appropriate registers. Operational feedback is provided via status registers which can be read by the CPU. The addressing of the registers is described in table 1.

The contents of certain control registers are initialized to zero on RESET. Care should be exercised if the contents of a register are changed during operation, since certain changes may cause operational problems. For example, changing the number of bits per character while the transmitter is active may cause the transmission of an incorrect character. In general, the contents of the MR, the CSR, and the OPCR should only be changed while the receiver(s) and transmitter(s) are not enabled, and certain changes to the ACR should only be made while the C/T is stopped.

Mode registers 1 and 2 of each channel are accessed via independent auxiliary pointers. The pointer is set to MR1x by RESET or by issuing a 'reset pointer' command via the corresponding command register. Any read or write of the mode register while the pointer is at MR1x switches the pointer to MR2x. The pointer then remains at MR2x, so that subsequent accesses are always to MR2x unless the pointer is reset to MR1x as described above.

Mode, command, clock select, and status registers are duplicated for each channel to provide total independent operation and control. Refer to table 2 for register bit descriptions.

MR1A — Channel A Mode Register 1

MR1A is accessed when the channel A MR pointer points to MR1. The pointer is set to MR1 by RESET or by a 'set pointer' command applied via CRA. After reading or writing MR1A, the pointer will point to MR2A.

MR1A[7] — Channel A Receiver Request-to-Send Control — This bit controls the deactivation of the RTSAN output (OP0) by the receiver. This output is normally asserted by setting OPR[0] and negated by resetting OPR[0]. MR1A[7] = 1 causes RTSAN to be negated upon receipt of a valid start bit if the channel A FIFO is full. However, OPR[0] is not reset and RTSAN will be asserted again when an empty FIFO position is available. This feature can be used for flow control to prevent overrun in the receiver by using the RTSAN output signal to control the CTSN input of the transmitting device.

MR1A[6] — Channel A Receiver Interrupt Select — This bit selects either the channel A receiver ready status (RXRDY) or the channel A FIFO full status (FFULL) to be used for CPU interrupts. It also causes the selected bit to be output on OP4 if it is programmed as an interrupt output via the OPCR.

MR1A[5] — Channel A Error Mode Select — This bit selects the operating mode of the three FIFOed status bits (FE, PE, received break) for channel A. In the 'character' mode, status is provided on a character-by-character basis: the status applies only to the character at the top of the FIFO. In the 'block' mode, the status provided in the SR for these bits is the ac-

Table 1. 2681 REGISTER ADDRESSING

A3	A2	A1	A0	READ (RDN = 0)	WRITE (WRN = 0)
0	0	0	0	Mode Register A (MR1A, MR2A)	Mode Register A (MR1A, MR2A)
0	0	0	1	Status Register A (SRA)	Clock Select Reg. A (CSRA)
0	0	1	0	"Reserved"	Command Register A (CRA)
0	0	1	1	RX Holding Register A (RHRA)	TX Holding Register A (THRA)
0	1	0	0	Input Port Change Reg. (IPCR)	Aux. Control Register (ACR)
0	1	0	1	Interrupt Status Reg. (ISR)	Interrupt Mask Reg. (IMR)
0	1	1	0	Counter/Timer Upper (CTU)	C/T Upper Register (CTUR)
0	1	1	1	Counter/Timer Lower (CTL)	C/T Lower Register (CTLR)
1	0	0	0	Mode Register B (MR1B, MR2B)	Mode Register B (MR1B, MR2B)
1	0	0	1	Status Register B (SRB)	Clock Select Reg. B (CSRB)
1	0	1	0	"Reserved"	Command Register B (CRB)
1	0	1	1	RX Holding Register B (RHRB)	TX Holding Register B (THRB)
1	1	0	0	"Reserved"	"Reserved"
1	1	0	1	Input Port	Output Port Conf. Reg. (OPCR)
1	1	1	0	Start Counter Command	Set Output Port Bits Command
1	1	1	1	Stop Counter Command	Reset Output Port Bits Command

Preliminary

Table 2. REGISTER BIT FORMATS

	BIT7	BIT6	BIT5	BIT4	BIT3	BIT2	BIT1	BIT0
	RX RTS CONTROL	RX INT SELECT	ERROR MODE	PARITY MODE		PARITY TYPE	BITS PER CHAR.	
MR1A MR1B	0 = no 1 = yes	0 = RXRDY 1 = FFULL	0 = char 1 = block	00 = with parity 01 = force parity 10 = no parity 11 = multi-drop mode		0 = even 1 = odd	00 = 5 01 = 6 10 = 7 11 = 8	

	BIT7	BIT6	BIT5	BIT4	BIT3	BIT2	BIT1	BIT0
	CHANNEL MODE		Tx RTS CONTROL	CTS ENABLE Tx	STOP BIT LENGTH*			
MR2A MR2B	00 = Normal 01 = Auto echo 10 = Local loop 11 = Remote loop		0 = no 1 = yes	0 = no 1 = yes	0 = 0.563 1 = 0.625 2 = 0.688 3 = 0.750	4 = 0.813 5 = 0.875 6 = 0.938 7 = 1.000	8 = 1.563 9 = 1.625 A = 1.688 B = 1.750	C = 1.813 D = 1.875 E = 1.938 F = 2.000

*Add 0.5 to values shown for 0–7 if channel is programmed for 5 bits/char

	BIT7	BIT6	BIT5	BIT4	BIT3	BIT2	BIT1	BIT0
CSRA CSRB	RECEIVER CLOCK SELECT				TRANSMITTER CLOCK SELECT			
	See text				See text			

	BIT7	BIT6	BIT5	BIT4	BIT3	BIT2	BIT1	BIT0
CRRA CRRB	not used—must be 0	MISCELLANEOUS COMMANDS			DISABLE Tx	ENABLE Tx	DISABLE Rx	ENABLE Rx
		See text			0 = no 1 = yes	0 = no 1 = yes	0 = no 1 = yes	0 = no 1 = yes

	BIT7	BIT6	BIT5	BIT4	BIT3	BIT2	BIT1	BIT0
	RECEIVED BREAK	FRAMING ERROR	PARITY ERROR	OVERRUN ERROR	TxEMT	TxRDY	FFULL	RxRDY
SRRA SRRB	0 = no 1 = yes *	0 = no 1 = yes *	0 = no 1 = yes *	0 = no 1 = yes	0 = no 1 = yes	0 = no 1 = yes	0 = no 1 = yes	0 = no 1 = yes

*These status bits are appended to the corresponding data character in the receive FIFO. A read of the status register provides these bits (7-5) from the top of the FIFO together with bits 4-0. These bits are cleared by a "reset error status" command. In character mode they are discarded when the corresponding data character is read from the FIFO.

	BIT7	BIT6	BIT5	BIT4	BIT3	BIT2	BIT1	BIT0
	OP7	OP6	OP5	OP4	OP3		OP2	
OPCR	0 = OPR[7] 1 = TxRDYB	0 = OPR[6] 1 = TxRDYA	0 = OPR[5] 1 = RxRDY/FFULLB	0 = OPR[4] 1 = RxRDY/FFULLA	00 = OPR[3] 01 = C/T OUTPUT 10 = TxCB (1X) 11 = RxCB (1X)		00 = OPR[2] 01 = TxCA (16X) 10 = TxCA (1X) 11 = RxCA (1X)	

	BIT7	BIT6	BIT5	BIT4	BIT3	BIT2	BIT1	BIT0
	BRG SET SELECT	COUNTER/TIMER MODE AND SOURCE			DELTA IP3 INT	DELTA IP2 INT	DELTA IP1 INT	DELTA IP0 INT
ACCR	0 = set1 1 = set2	See table 4			0 = off 1 = on	0 = off 1 = on	0 = off 1 = on	0 = off 1 = on

	BIT7	BIT6	BIT5	BIT4	BIT3	BIT2	BIT1	BIT0
	DELTA IP3	DELTA IP2	DELTA IP1	DELTA IP0	IP3	IP2	IP1	IP0
IPCR	0 = no 1 = yes	0 = no 1 = yes	0 = no 1 = yes	0 = no 1 = yes	0 = low 1 = high	0 = low 1 = high	0 = low 1 = high	0 = low 1 = high

Preliminary

Table 2. REGISTER BIT FORMATS (continued)

	BIT7	BIT6	BIT5	BIT4	BIT3	BIT2	BIT1	BIT0
ISR	INPUT PORT CHANGE	DELTA BREAK B	RxRDY/ FFULLB	TxRDYB	COUNTER READY	DELTA BREAK A	RxRDY/ FFULLA	TxRDYA
	0 = no 1 = yes	0 = no 1 = yes	0 = no 1 = yes	0 = no 1 = yes	0 = no 1 = yes	0 = no 1 = yes	0 = no 1 = yes	0 = no 1 = yes

	BIT7	BIT6	BIT5	BIT4	BIT3	BIT2	BIT1	BIT0
IMR	IN. PORT CHANGE INT	DELTA BREAK B INT	RxRDY/ FFULLB INT	TxRDYB INT	COUNTER READY INT	DELTA BREAK A INT	RxRDY/ FFULLA INT	TxRDYA INT
	0 = off 1 = on	0 = off 1 = on	0 = off 1 = on	0 = off 1 = on	0 = off 1 = on	0 = off 1 = on	0 = off 1 = on	0 = off 1 = on

	BIT7	BIT6	BIT5	BIT4	BIT3	BIT2	BIT1	BIT0
CTUR	C/T[15]	C/T[14]	C/T[13]	C/T[12]	C/T[11]	C/T[10]	C/T[9]	C/T[8]

	BIT7	BIT6	BIT5	BIT4	BIT3	BIT2	BIT1	BIT0
CTLR	C/T[7]	C/T[6]	C/T[5]	C/T[4]	C/T[3]	C/T[2]	C/T[1]	C/T[0]

cumulation (logical OR) of the status for all characters coming to the top of the FIFO since the last 'reset error' command for channel A was issued.

MR1A[4:3] — Channel A Parity Mode Select — If 'with parity' or 'force parity' is selected, a parity bit is added to the transmitted character and the receiver performs a parity check on incoming data. MR1A[4:3] = 11 selects channel A to operate in the special multidrop mode described in the Operation section.

MR1A[2] — Channel A Parity Type Select — This bit selects the parity type (odd or even) if the 'with parity' mode is programmed by MR1A[4:3], and the polarity of the forced parity bit if the 'force parity' mode is programmed. It has no effect if the 'no parity' mode is programmed. In the special multidrop mode it selects the polarity of the A/D bit.

MR1A[1:0] — Channel A Bits per Character Select — This field selects the number of data bits per character to be transmitted and received. The character length does not include the start, parity, and stop bits.

MR2A — Channel A Mode Register 2

MR2A is accessed when the channel A MR pointer points to MR2, which occurs after any access to MR1A. Accesses to MR2A do not change the pointer.

MR2A[7:6] — Channel A Mode Select — Each channel of the DUART can operate in one of four modes. MR2A[7:6] = 00 is the normal mode, with the transmitter and receiver operating independently. MR2A[7:6] = 01 places the channel in the automatic echo mode, which automatically retransmits the received data. The following conditions are true while in automatic echo mode:

1. Received data is reclocked and retransmitted on the TxDA output.
2. The receive clock is used for the transmitter.
3. The receiver must be enabled, but the transmitter need not be enabled.
4. The channel A TxRDY and TxEMT status bits are inactive.
5. The received parity is checked, but is not regenerated for transmission, i.e., transmitted parity bit is as received.
6. Character framing is checked, but the stop bits are retransmitted as received.
7. A received break is echoed as received until the next valid start bit is detected.
8. CPU to receiver communication continues normally, but the CPU to transmitter link is disabled.

Two diagnostic modes can also be configured. MR2A[7:6] = 10 selects local loopback mode. In this mode:

1. The transmitter output is internally connected to the receiver input.
2. The transmit clock is used for the receiver.
3. The TxDA output is held high.
4. The RxDA input is ignored.
5. The transmitter must be enabled, but the receiver need not be enabled.
6. CPU to transmitter and receiver communications continue normally.

The second diagnostic mode is the remote loopback mode, selected by MR2A[7:6] = 11. In this mode:

1. Received data is relocked and retransmitted on the TxDA output.
2. The receive clock is used for the transmitter.

Preliminary

3. Received data is not sent to the local CPU, and the error status conditions are inactive.
4. The received parity is not checked and is not regenerated for transmission, i.e., transmitted parity bit is as received.
5. The receiver must be enabled.
6. Character framing is not checked, and the stop bits are retransmitted as received.
7. A received break is echoed as received until the next valid start bit is detected.

The user must exercise care when switching into and out of the various modes. The selected mode will be activated immediately upon mode selection, even if this occurs in the middle of a received or transmitted character. Likewise, if a mode is deselected, the device will switch out of the mode immediately. An exception to this is switching out of autoecho or remote loopback modes: if the de-selection occurs just after the receiver has sampled the stop bit (indicated in autoecho by assertion of RxRDY), and the transmitter is enabled, the transmitter will remain in autoecho mode until the entire stop bit has been retransmitted.

MR2A[5] — Channel A Transmitter Request-to-Send Control — This bit controls the deactivation of the RTSAN output (OPR0) by the transmitter. This output is normally asserted by setting OPR[0] and negated by resetting OPR[0]. MR2A[5] = 1 causes OPR[0] to be reset automatically one bit time after the characters in the channel A transmit shift register and in the THR, if any, are completely transmitted, including the programmed number of stop bits, if the transmitter is not enabled. This feature can be used to automatically terminate the transmission of a message as follows:

1. Program auto-reset mode: MR2A[5] = 1.
2. Enable transmitter.
3. Assert RTSAN: OPR[0] = 1.
4. Send message.
5. Disable transmitter after the last character is loaded into the channel A THR.
6. The last character will be transmitted and OPR[0] will be reset one bit time after the last stop bit, causing RTSAN to be negated.

MR2A[4] — Channel A Clear-to-Send Control — If this bit is 0, CTSAN has no effect on the transmitter. If this bit is a 1, the transmitter checks the state of CTSAN (IP0) each time it is ready to send a character. If IP0 is asserted (low), the character is transmitted. If it is negated (high), the TxDA output remains in the marking state and the transmission is delayed until CTSAN goes low. Changes in CTSAN while a character is being transmitted do not affect the transmission of that character.

MR2A[3:0] — Channel A Stop Bit Length Select — This field programs the length of the stop bit appended to the transmitted character. Stop bit lengths of 9/16 to 1 and 1-9/16 to 2 bits, in increments of 1/16 bit, can be programmed for character lengths of 6, 7, and 8 bits. For a character length of 5 bits, 1-1/16 to 2 stop bits can be programmed in increments of 1/16 bit. The receiver only checks for a 'mark' condition at the center of the first stop bit position (one bit time after the last data bit, or after the parity bit if parity is enabled) in all cases.

If an external 1X clock is used for the transmitter, MR2A[3] = 0 selects one stop bit and MR2A[3] = 1 selects two stop bits to be transmitted.

MR1B — Channel B Mode Register 1

MR1B is accessed when the channel B MR pointer points to MR1. The pointer is set to MR1 by RESET or by a 'set pointer' command applied via CRB. After reading or writing MR1B, the pointer will point to MR2B.

The bit definitions for this register are identical to the bit definitions for MR1A, except that all control actions apply to the channel B receiver and transmitter and the corresponding inputs and outputs.

MR2B — Channel B Mode Register 2

MR2B is accessed when the channel B MR pointer points to MR2, which occurs after any access to MR1B. Accesses to MR2B do not change the pointer.

The bit definitions for this register are identical to the bit definitions for MR2A, except that all control actions apply to the channel B receiver and transmitter and the corresponding inputs and outputs.

CSRA — Channel A Clock Select Register

CSRA[7:4] — Channel A Receiver Clock Select — This field selects the baud rate clock for the channel A receiver as follows:

	Baud Rate CLOCK = 3.6864MHz	
CSRA[7:4]	ACR[7] = 0	ACR[7] = 1
0 0 0 0	50	75
0 0 0 1	110	110
0 0 1 0	134.5	134.5
0 0 1 1	200	150
0 1 0 0	300	300
0 1 0 1	600	600
0 1 1 0	1,200	1,200
0 1 1 1	1,050	2,000
1 0 0 0	2,400	2,400
1 0 0 1	4,800	4,800
1 0 1 0	7,200	1,800
1 0 1 1	9,600	9,600
1 1 0 0	38.4K	19.2K
1 1 0 1	Timer	Timer
1 1 1 0	IP4—16X	IP4—16X
1 1 1 1	IP4—1X	IP4—1X

The receiver clock is always a 16X clock except for CSRA[7:4] = 1111.

CSRA[3:0] — Channel A Transmitter Clock Select — This field selects the baud rate clock for the channel A transmitter. The field definition is as per CSRA[7:4] except as follows:

	Baud Rate	
CSRA[3:0]	ACR[7] = 0	ACR[7] = 1
1 1 1 0	IP3—16X	IP3—16X
1 1 1 1	IP3—1X	IP3—1X

The transmitter clock is always a 16X clock except for CSRA[3:0] = 1111.

CSRB — Channel B Clock Select Register

CSRB[7:4] — Channel B Receiver Clock Select — This field selects the baud rate clock for the channel B receiver. The field definition is as per CSRA[7:4] except as follows:

	Baud Rate	
CSRB[7:4]	ACR[7] = 0	ACR[7] = 1
1 1 1 0	IP6—16X	IP6—16X
1 1 1 1	IP6—1X	IP6—1X

The receiver clock is always a 16X clock except for CSRB[7:4] = 1111.

CSRB[3:0] — Channel B Transmitter Clock Select — This field selects the baud rate clock for the channel B transmitter. The field definition is as per CSRA[7:4] except as follows:

	Baud Rate	
CSRB[3:0]	ACR[7] = 0	ACR[7] = 1
1 1 1 0	IP5—16X	IP5—16X
1 1 1 1	IP5—1X	IP5—1X

The transmitter clock is always a 16X clock except for CSRB[3:0] = 1111

Preliminary

CRA — Channel A Command Register

CRA is a register used to supply commands to channel A. Multiple commands can be specified in a single write to CRA as long as the commands are non-conflicting, e.g., the 'enable transmitter' and 'reset transmitter' commands cannot be specified in a single command word.

CRA[6:4] — Channel A Miscellaneous Commands — The encoded value of this field may be used to specify a single command as follows:

CRA[6:4]	COMMAND
0 0 0	No command.
0 0 1	Reset MR pointer. Causes the channel A MR pointer to point to MR1.
0 1 0	Reset receiver. Resets the channel A receiver as if a hardware reset had been applied. The receiver is disabled and the FIFO is flushed.
0 1 1	Reset transmitter. Resets the channel A transmitter as if a hardware reset had been applied.
1 0 0	Reset error status. Clears the channel A Received Break, Parity Error, Framing Error, and Overrun Error bits in the status register (SRA[7:4]). Used in character mode to clear OE status (although RB, PE, and FE bits will also be cleared) and in block mode to clear all error status after a block of data has been received.
1 0 1	Reset channel A break change interrupt. Causes the channel A break detect change bit in the interrupt status register (ISR[2]) to be cleared to zero.
1 1 0	Start break. Forces the TXDA output low (spacing). If the transmitter is empty the start of the break condition will be delayed up to two bit times. If the transmitter is active the break begins when transmission of the character is completed. If a character is in the THR, the start of the break will be delayed until that character, or any others loaded subsequently are transmitted. The transmitter must be enabled for this command to be accepted.
1 1 1	Stop Break. The TXDA line will go high (marking) within two bit times. TXDA will remain high for one bit time before the next character, if any, is transmitted.

CRA[3] — Disable Channel A Transmitter — This command terminates transmitter operation and resets the TxRDY and TxEMT status bits. However, if a character is being transmitted or if a character is in the THR when the transmitter is disabled, the transmission of the character(s) is completed before assuming the inactive state.

CRA[2] — Enable Channel A Transmitter — Enables operation of the channel A transmitter. The TxRDY status bit will be asserted.

CRA[1] — Disable Channel A Receiver — This command terminates operation of the receiver immediately — a character being received will be lost. The command has no effect on the receiver status bits or any other control registers. If the special multidrop mode is programmed, the receiver operates even if it is disabled. See Operation section.

CRA[0] — Enable Channel A Receiver — Enables operation of the channel A receiver. If not in the special wakeup mode, this also forces the receiver into the search for start-bit state.

CRB — Channel B Command Register

CRB is a register used to supply commands to channel B. Multiple commands can be specified in a single write to CRB as long as the commands are non-conflicting, e.g., the 'enable transmitter' and 'reset transmitter' commands cannot be specified in a single command word.

The bit definitions for this register are identical to the bit definitions for CRA, except that all control actions apply to the channel B receiver and transmitter and the corresponding inputs and outputs.

SRA — Channel A Status Register

SRA[7] — Channel A Received Break — This bit indicates that an all zero character of the programmed length has been received without a stop bit. Only a single FIFO position is occupied when a break is received: further entries to the FIFO are inhibited until the RxDA line returns to the marking state for at least one-half a bit time (two successive edges of the internal or external 1x clock).

When this bit is set, the channel A 'change in break' bit in the ISR (ISR[2]) is set. ISR[2] is also set when the end of the break condition, as defined above, is detected.

The break detect circuitry can detect breaks that originate in the middle of a received character. However, if a break begins in the middle of a character, it must persist until at least the end of the next character time in order for it to be detected.

SRA[6] — Channel A Framing Error — This bit, when set, indicates that a stop bit was not detected when the corresponding data character in the FIFO was received. The stop bit check is made in the middle of the first stop bit position.

SRA[5] — Channel A Parity Error — This bit is set when the 'with parity' or 'force parity' mode is programmed and the corresponding character in the FIFO was received with incorrect parity.

In the special multidrop mode the parity error bit stores the received A/D bit.

SRA[4] — Channel A Overrun Error — This bit, when set, indicates that one or more characters in the received data stream have been lost. It is set upon receipt of a new character when the FIFO is full and a character is already in the receive shift register waiting for an empty FIFO position. When this occurs, the character in the receive shift register (and its break detect, parity error and framing error status, if any) is lost.

This bit is cleared by a 'reset error status' command.

SRA[3] — Channel A Transmitter Empty (TxEMTA) — This bit will be set when the channel A transmitter underruns, i.e., both the transmit holding register (THR) and the transmit shift register are empty. It is set after transmission of the last stop bit of a character if no character is in the THR awaiting transmission. It is reset when the THR is loaded by the CPU or when the transmitter is disabled.

SRA[2] — Channel A Transmitter Ready (TxRDYA) — This bit, when set, indicates that the THR is empty and ready to be loaded with a character. This bit is cleared when the THR is loaded by the CPU and is set when the character is transferred to the transmit shift register. TxRDY is reset when the transmitter is disabled and is set when the transmitter is first enabled, viz., characters loaded into the THR while the transmitter is disabled will not be transmitted.

Preliminary

SRA[7] — Channel A FIFO Full (FFULLA) — This bit is set when a character is transferred from the receive shift register to the receive FIFO and the transfer causes the FIFO to become full, i.e., all three FIFO positions are occupied. It is reset when the CPU reads the RHR. If a character is waiting in the receive shift register because the FIFO is full, FFULL will not be reset when the CPU reads the RHR.

SRA[0] — Channel A Receiver Ready (RxRDYA) — This bit indicates that a character has been received and is waiting in the FIFO to be read by the CPU. It is set when the character is transferred from the receive shift register to the FIFO and reset when the CPU reads the RHR, if after this read there are no more characters still in the FIFO.

SRB — Channel B Status Register

The bit definitions for this register are identical to the bit definitions for SRA, except that all status applies to the channel B receiver and transmitter and the corresponding inputs and outputs.

OPCR — Output Port Configuration Register

OPCR[7] — OP7 Output Select — This bit programs the OP7 output to provide one of the following:

- The complement of OPR[7]
- The channel B transmitter interrupt output, which is the complement of TxRDYB. When in this mode OP7 acts as an open collector output. Note that this output is not masked by the contents of the IMR.

OPCR[6] — OP6 Output Select — This bit programs the OP6 output to provide one of the following:

- The complement of OPR[6]
- The channel A transmitter interrupt output, which is the complement of TxRDYA. When in this mode OP6 acts as an open collector output. Note that this output is not masked by the contents of the IMR.

OPCR[5] — OP5 Output Select — This bit programs the OP5 output to provide one of the following:

- The complement of OPR[5]
- The channel B receiver interrupt output, which is the complement of ISR[5]. When in this mode OP5 acts as an open collector output. Note that this output is not masked by the contents of the IMR.

OPCR[4] — OP4 Output Select — This bit programs the OP4 output to provide one of the following:

- The complement of OPR[4]
- The channel A receiver interrupt output, which is the complement of ISR[1]. When in this mode OP4 acts as an open collector output. Note that this output is not masked by the contents of the IMR.

OPCR[3:2] — OP3 Output Select — This field programs the OP3 output to provide one of the following:

- The complement of OPR[3]
- The counter/timer output, in which case OP3 acts as an open collector output. In the timer mode, this output is a square wave at the programmed frequency. In the counter mode, the output remains high until terminal count is reached, at which time it goes low. The output returns to the high state when the counter is stopped by a stop counter command. Note that this output is not masked by the contents of the IMR.
- The 1X clock for the channel B transmitter, which is the clock that shifts the transmitted data. If data is not being transmitted, a free running 1X clock is output.
- The 1X clock for the channel B receiver, which is the clock that samples the received data. If data is not being received, a free running 1X clock is output.

OPCR[1:0] — OP2 Output Select — This field programs the OP2 output to provide one of the following:

- The complement of OPR[2]
- The 16X clock for the channel A transmitter. This is the clock selected by CSRA[3:0], and will be a 1X clock if CSRA[3:0] = 1111.
- The 1X clock for the channel A transmitter, which is the clock that shifts the transmitted data. If data is not being transmitted, a free running 1X clock is output.
- The 1X clock for the channel A receiver, which is the clock that samples the received data. If data is not being received, a free running 1X clock is output.

ACR — Auxiliary Control Register

ACR[7] — Baud Rate Generator Set Select — This bit selects one of two sets of baud rates to be generated by the BRG:

Set 1: 50, 110, 134.5, 200, 300, 600, 1.05K, 1.2K, 2.4K, 4.8K, 7.2K, 9.6K, and 38.4K baud.

Set 2: 75, 110, 134.5, 150, 300, 600, 1.2K, 1.8K, 2.0K, 2.4K, 4.8K, 9.6K, and 19.2K baud.

The selected set of rates is available for use by the channel A and B receivers and transmitters as described in CSRA and CSRB. Baud rate generator characteristics are given in table 3.

Table 3. BAUD RATE GENERATOR CHARACTERISTICS
CRYSTAL OR CLOCK = 3.6864MHz

NOMINAL RATE (BAUD)	ACTUAL 16X CLOCK (KHz)	ERROR (PERCENT)
50	0.8	0
75	1.2	0
110	1.759	-0.069
134.5	2.153	0.059
150	2.4	0
200	3.2	0
300	4.8	0
600	9.6	0
1050	16.756	-0.260
1200	19.2	0
1800	28.8	0
2000	32.056	0.175
2400	38.4	0
4800	76.8	0
7200	115.2	0
9600	153.6	0
19.2K	307.2	0
38.4K	614.4	0

NOTE
Duty cycle of 16X clock is 50% ± 1%

Preliminary

ACR[6:4]—Counter/Timer Mode and Clock Source Select — This field selects the operating mode of the counter/timer and its clock source as shown in table 4.

ACR[3:0] — IP3, IP2, IP1, IP0 Change of State Interrupt Enable — This field selects which bits of the Input Port Change register (IPCR) cause the input change bit in the interrupt status register (ISR[7]) to be set. If a bit is in the 'on' state, the setting of the corresponding bit in the IPCR will also result in the setting of ISR[7], which results in the generation of an interrupt output if IMR[7] = 1. If a bit is in the 'off' state, the setting of that bit in the IPCR has no effect on ISR[7].

Table 4. ACR [6:4] FIELD DEFINITION

ACR[6:4]	MODE	CLOCK SOURCE
0 0 0	Counter	External (IP2)
0 0 1	Counter	TXCA — 1X clock of channel A transmitter
0 1 0	Counter	TXCB — 1X clock of channel B transmitter
0 1 1	Counter	Crystal or external clock (X1/CLK) divided by 16
1 0 0	Timer	External (IP2)
1 0 1	Timer	External (IP2) divided by 16
1 1 0	Timer	Crystal or external clock (X1/CLK)
1 1 1	Timer	Crystal or external clock (X1/CLK) divided by 16

IPCR — Input Port Change Register

IPCR[7:4] — IP3, IP2, IP1, IP0 Change of State — These bits are set when a change of state, as defined in the Input Port section of this data sheet, occurs at the respective input pins. They are cleared when the IPCR is read by the CPU. A read of the IPCR also clears ISR[7], the input change bit in the interrupt status register.

The setting of these bits can be programmed to generate an interrupt to the CPU.

IPCR[3:0] — IP3, IP2, IP1, IP0 Current State — These bits provide the current state of the respective inputs. The information is unlatched and reflects the state of the input pins at the time the IPCR is read.

ISR — Interrupt Status Register

This register provides the status of all potential interrupt sources. The contents of this register are masked by the interrupt mask register (IMR). If a bit in the ISR is a '1' and the corresponding bit in the IMR is also a '1', the INTRN output will be asserted. If the corresponding bit in the IMR is a zero, the state of the bit in the ISR has no effect on the INTRN output. Note that the IMR does not mask the reading of the ISR — the true status will be provided regardless of the contents of the IMR. The contents of this register are initialized to 00_{16} when the DUART is reset.

ISR[7] — Input Port Change Status — This bit is a '1' when a change of state has occurred at the IP0, IP1, IP2, or IP3 inputs and that event has been selected to cause an interrupt by the programming of ACR[3:0]. The bit is cleared when the CPU reads the IPCR.

ISR[6] — Channel B Change in Break — This bit, when set, indicates that the channel B receiver has detected the beginning or the end of a received break. It is reset when the CPU issues a channel B 'reset break change interrupt' command.

ISR[5] — Channel B Receiver Ready or FIFO Full — The function of this bit is programmed by MR1B[6]. If programmed as receiver ready, it indicates that a character has been received in channel B and is waiting in the FIFO to be read by the CPU. It is set when the character is transferred from the receive shift register to the FIFO and reset when the CPU reads the RHR. If after this read there are more characters still in the FIFO the bit will be set again after the FIFO is 'popped'. If programmed as FIFO full, it is set when a character is transferred from the receive holding register to the receive FIFO and the transfer causes the channel B FIFO to become full, i.e., all three FIFO positions are occupied. It is reset when the CPU reads the RHR. If a character is waiting in the receive shift register because the FIFO is full, the bit will be set again when the waiting character is loaded into the FIFO.

ISR[4] — Channel B Transmitter Ready — This bit is a duplicate of TxRDYB (SRB[2]).

ISR[3] — Counter Ready — In the counter mode, this bit is set when the counter reaches terminal count and is reset when the counter is stopped by a stop counter command.

In the timer mode, this bit is set once each cycle of the generated square wave (every other time that the counter/timer reaches zero count). The bit is reset by a stop counter command. The command, however, does not stop the counter/timer.

ISR[2] — Channel A Change in Break — This bit, when set, indicates that the channel A receiver has detected the beginning or the end of a received break. It is reset when the CPU issues a channel A 'reset break change interrupt' command.

ISR[1] — Channel A Receiver Ready or FIFO Full — The function of this bit is programmed by MR1A[6]. If programmed as receiver ready, it indicates that a character has been received in channel A and is waiting in the FIFO to be read by the CPU. It is set when the character is transferred from the receive shift register to the FIFO and reset when the CPU reads the RHR. If after this read there are more characters still in the FIFO the bit will be set again after the FIFO is 'popped'. If programmed as FIFO full, it is set when a character is transferred from the receive holding register to the receive FIFO and the transfer causes the channel A FIFO to become full, i.e., all three FIFO positions are occupied. It is reset when the CPU reads the RHR. If a character is waiting in the receive shift register because the FIFO is full, the bit will be set again when the waiting character is loaded into the FIFO.

ISR[0] — Channel A Transmitter Ready — This bit is a duplicate of TxRDYA (SRA[2]).

IMR — Interrupt Mask Register

The programming of this register selects which bits in the ISR cause an interrupt output. If a bit in the ISR is a '1' and the corresponding bit in the IMR is also a '1', the INTRN output will be asserted. If the corresponding bit in the IMR is a zero, the state of the bit in the ISR has no effect on the INTRN output. Note that the IMR does not mask the programmable interrupt outputs OP3-OP7 or the reading of the ISR.

Preliminary

CTUR and CTLR — Counter/Timer Registers

The CTUR and CTLR hold the eight MSB's and eight LSB's respectively of the value to be used by the counter/timer in either the counter or timer modes of operation. Note that these registers are write-only and cannot be read by the CPU.

In the timer (programmable divider) mode, the C/T generates a square wave with a period of twice the value (in clock periods) of these CTUR and CTLR. If the value in CTUR or CTLR is changed, the current half-period will not be affected, but subsequent half periods will be. In this mode the C/T runs continuously. Receipt of a start counter command (read with A3-A0 = 1110) causes the counter to terminate the current timing cycle and to begin a new cycle using the values in CTUR and CTLR.

The counter ready status bit (ISR[3]) is set once each cycle of the square wave. The bit is reset by a stop counter command (read with A3-A0 = 1111). The command, however, does not stop the C/T. The generated square wave is output on OP3 if it is programmed to be the C/T output.

In the counter mode, the C/T counts down the number of pulses loaded into CTUR and CTLR by the CPU. Counting begins upon receipt of a start counter command. Upon reaching terminal count (0000_{16}), the counter ready interrupt bit (ISR[3]) is set. The counter continues counting past the terminal count until stopped by the CPU. If OP3 is programmed to be the output of the C/T, the output remains high until terminal count is reached, at which time it goes low. The output returns to the high state and ISR[3] is cleared when the counter is stopped by a stop counter command. The CPU may change the values of CTUR and CTLR at any time, but the new count becomes effective only on the next start counter command. If new values have not been loaded, the previous count values are preserved and used for the next count cycle.

In the counter mode, the current value of the upper and lower 8 bits of the counter (CTU, CTL) may be read by the CPU. It is recommended that the counter be stopped when reading to prevent potential problems which may occur if a carry from the lower 8-bits to the upper 8-bits occurs between the times that both halves of the counter are read. However, note that a subsequent start counter command will cause the counter to begin a new count cycle using the values in CTUR and CTLR.

ABSOLUTE MAXIMUM RATINGS[1]

PARAMETER	RATING	UNIT
Operating ambient temperature[2]	0 to +70	°C
Storage temperature	−65 to +150	°C
All voltages with respect to ground[3]	−0.5 to +6.0	V

NOTES:

1. Stresses above those listed under Absolute Maximum Ratings may cause permanent damage to the device. This is a stress rating only and functional operation of the device at these or at any other condition above those indicated in the operation section of this specification is not implied.
2. For operating at elevated temperatures, the device must be derated based on +150°C maximum junction temperature.
3. This product includes circuitry specifically designed for the protection of its internal devices from damaging effects of excessive static charge. Nonetheless, it is suggested that conventional precautions be taken to avoid applying any voltages larger than the rated maxima.

DC ELECTRICAL CHARACTERISTICS $T_A = 0°C$ to $+70°C$, $V_{CC} = 5.0V \pm 5\%$[4,5,6]

PARAMETER		TEST CONDITIONS	LIMITS			UNIT
			Min	Typ	Max	
V_{IL}	Input low voltage				0.8	V
V_{IH}	Input high voltage (except X1/CLK)		2.0			V
V_{IH}	Input high voltage (X1/CLK)		4.0			V
V_{OL}	Output low voltage	$I_{OL} = 2.4mA$			0.4	V
V_{OH}	Output high voltage (except o.c. outputs)	$I_{OH} = -400\mu A$	2.4			V
I_{IL}	Input leakage current	$V_{IN} = 0$ to V_{CC}	−10		10	μA
I_{LT}	Data bus 3-state leakage current	$V_O = 0$ to V_{CC}	−10		10	μA
I_{OC}	Open collector output leakage current	$V_O = 0$ to V_{CC}	−10		10	μA
I_{CC}	Power supply current				150	mA

NOTES:

4. Parameters are valid over specified temperature range.
5. All voltage measurements are referenced to ground (GND). For testing, all input signals swing between 0.4V and 2.4V with a transition time of 20ns maximum. All time measurements are referenced at input voltages of 0.8V and 2.0V and output voltages of 0.8V and 2.0V as appropriate.
6. Typical values are at +25°C, typical supply voltages, and typical processing parameters.

Preliminary

AC ELECTRICAL CHARACTERISTICS $T_A = 0°C$ to $+70°C$, $V_{CC} = 5.0V \pm 5\%$[4,5,6,7]

PARAMETER		TENTATIVE LIMITS			UNIT
		Min	Typ	Max	
Reset Timing (figure 1)					
t_{RES}	RESET pulse width	1.0			μs
Bus Timing (figure 2)[8]					
t_{AS}	A0–A3 setup time to RDN, WRN low	10			ns
t_{AH}	A0–A3 hold time from RDN, WRN high	0			ns
t_{CS}	CEN setup time to RDN, WRN low	0			ns
t_{CH}	CEN hold time from RDN, WRN high	0			ns
t_{RW}	WRN, RDN pulse width	225			ns
t_{DD}	Data valid after RDN low			175	ns
t_{DF}	Data bus floating after RDN high			100	ns
t_{DS}	Data setup time before WRN high	100			ns
t_{DH}	Data hold time after WRN high	20			ns
t_{RWD}	High time between READs and/or WRITEs[9,10]	200			ns
Port Timing (figure 3)[8]					
t_{PS}	Port input setup time before RDN low	0			ns
t_{PH}	Port input hold time after RDN high	0			ns
t_{PD}	Port output valid after WRN high			400	ns
Interrupt Timing (figure 4)					
t_{IR}	INTRN (or OP3–OP7 when used as interrupts) high from:				
	Read RHR (RXRDY/FFULL interrupt)			300	ns
	Write THR (TXRDY interrupt)			300	ns
	Reset command (delta break interrupt)			300	ns
	Stop C/T command (counter interrupt)			300	ns
	Read IPCR (input port change interrupt)			300	ns
	Write IMR (clear of interrupt mask bit)			300	ns
Clock Timing (figure 5)					
t_{CLK}	X1/CLK high or low time	100			ns
f_{CLK}	X1/CLK frequency	2.0	3.6864	4.0	MHz
t_{CTC}	CTCLK (IP2) high or low time	100			ns
f_{CTC}	CTCLK (IP2) frequency	0		4.0	MHz
t_{RX}	RxC high or low time	220			ns
f_{RX}	RxC frequency (16X)	0		2.0	MHz
	(1X)	0		1.0	MHz
t_{TX}	TxC high or low time	220			ns
f_{TX}	TxC frequency (16X)	0		2.0	MHz
	(1X)	0		1.0	MHz
Transmitter Timing (figure 6)					
t_{TXD}	TxD output delay from TxC low			350	ns
t_{TCS}	TxC output skew from TxD output data	0		150	ns
Receiver Timing (figure 7)					
t_{RXS}	RxD data setup time to RXC high	240			ns
t_{RXH}	RxD data hold time from RXC high	200			ns

NOTES:

4. Parameters are valid over specified temperature range.
5. All voltage measurements are referenced to ground (GND). For testing, all input signals swing between 0.4V and 2.4V with a transition time of 20ns maximum. All time measurements are referenced at input voltages of 0.8V and 2.0V and output voltages of 0.8V and 2.0V as appropriate.
6. Typical values are at +25°C, typical supply voltages, and typical processing parameters.
7. Test condition for outputs: $C_L = 150pF$, except interrupt outputs. Test condition for interrupt outputs: $C_L = 50pF$, $R_L = 2.7K$ ohm to V_{CC}.
8. Timing is illustrated and referenced to the WRN and RDN inputs. The device may also be operated with CEN as the 'strobing' input. In this case, all timing specifications apply referenced to the falling and rising edges of CEN.
9. If CEN is used as the 'strobing' input, this parameter defines the minimum high time between one CEN and the next.
10. Consecutive write operations to the same command register require at least three edges of the X1 clock between writes.

RESET TIMING

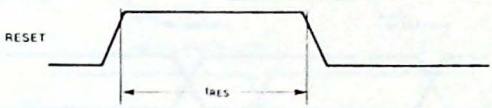

FIGURE 1

BUS TIMING

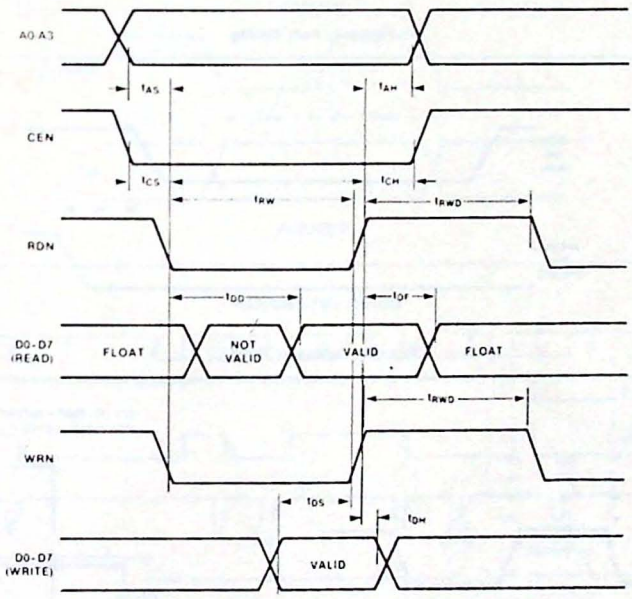

FIGURE 2

Preliminary

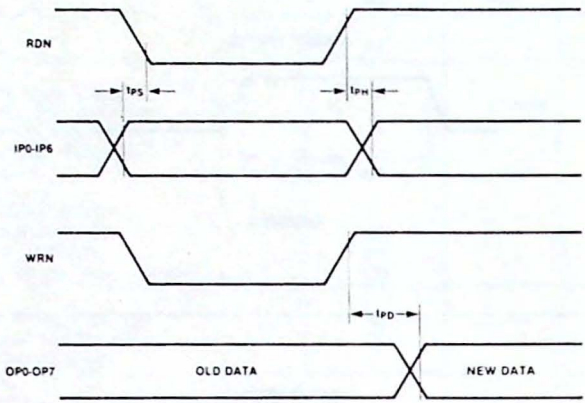

Figure 3. Port Timing

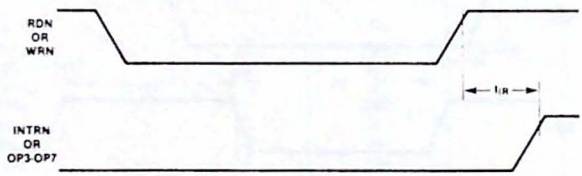

Figure 4. Interrupt Timing

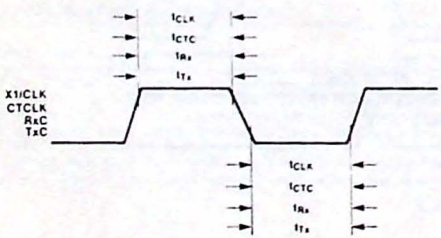

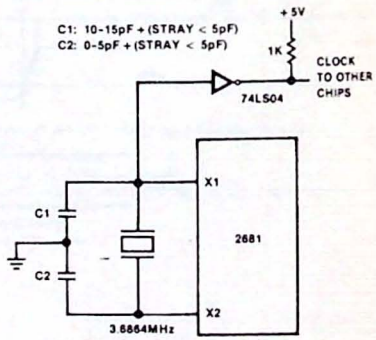

Figure 5. Clock Timing

CRYSTAL SERIES RESISTANCE SHOULD BE LESS THAN 180 OHMS.

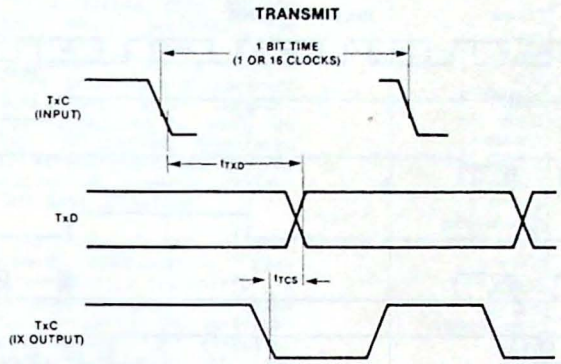

FIGURE 6

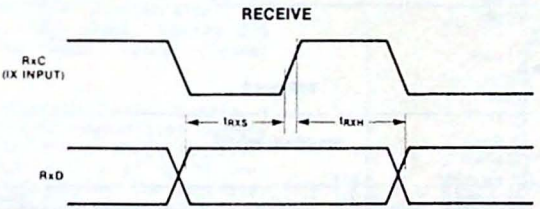

FIGURE 7

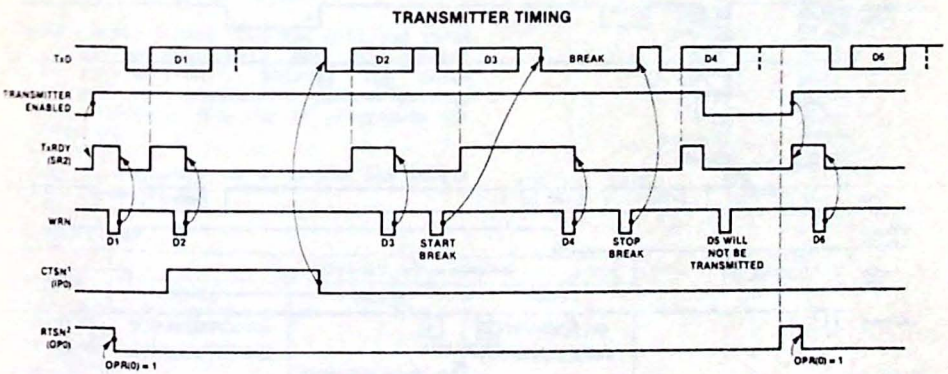

FIGURE 8

Preliminary

RECEIVER TIMING

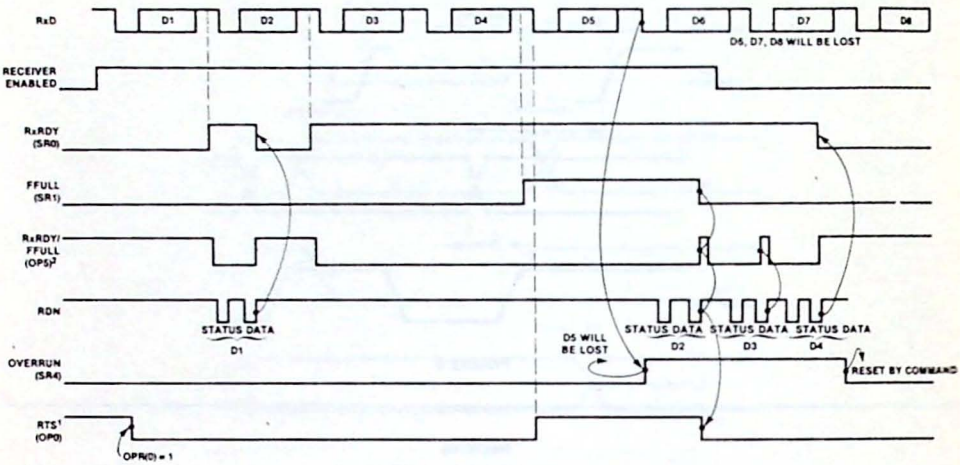

NOTES
1. TIMING SHOWN FOR MR1(7) = 1.
2. SHOWN FOR OPCR(4) = 1 AND MR1(6) = 0.

FIGURE 9

WAKE UP MODE

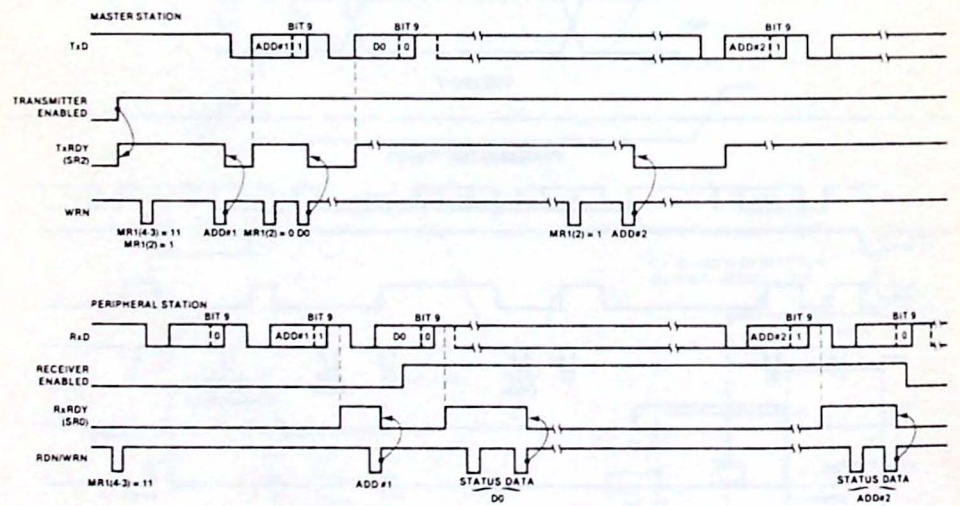

FIGURE 10

DUAL UNIVERSAL SERIAL COMMUNICATIONS CONTROLLER SCN68562

Advance Information

DESCRIPTION

The SCN68562 DUSCC is a single chip MOS-LSI communications device that provides two independent, multi-protocol, full duplex receiver/transmitter channels in a single package. It supports bit oriented and character oriented (byte count and byte control) synchronous data link controls as well as asynchronous protocols. The SCN68562 interfaces to the 68000 MPU via asynchronous bus control signals and is capable of program polled, interrupt driven, or DMA data transfers.

The operating mode and data format of each channel can be programmed independently. Each channel consists of a receiver, a transmitter, a 16-bit multi-function counter/timer, a digital phase locked loop (DPLL), a parity/CRC generator and checker, and associated control circuits. The two channels share a common bit rate generator (BRG), operating directly from a crystal or an external clock, which provides sixteen common bit rates simultaneously. The operating rate for the receiver and transmitter of each channel can be independently selected from the BRG, the DPLL, the counter/timer, or from an external 1x or 16x clock, making the DUSCC well suited for dual speed channel applications.

The transmitter and receiver each contain a four-deep FIFO with appended transmitter command and receiver status bits and a shift register. This permits reading and writing of up to four characters at a time, minimizing the potential of receiver overrun or transmitter underrun, and reducing interrupt or DMA overhead. In addition, a flow control capability is provided to disable a remote transmitter when the FIFO of the local receiving device is full.

Two modem control inputs (DCD and CTS) and three modem control outputs (RTS and two general purpose) are provided. Because the modem control inputs and outputs are general purpose in nature, optionally they can be programmed for other functions.

The DUSCC is available in a 40-pin and 48-pin DIP, and a 44-pin PLCC.

PIN CONFIGURATION

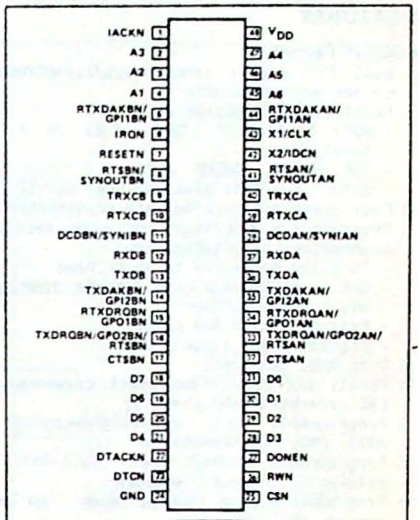

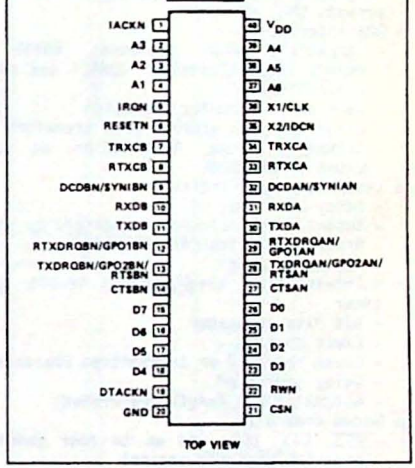

PLCC TO BE PROVIDED

ORDERING CODE

PACKAGES	V_{CC} = 5V ± 5%, T_A = 0° to 70°C		
	40-Pin	44-Pin	48-Pin
Ceramic DIP	SCN68562CxI40		SCN68562CxI48
Plastic DIP	SCN68562CxN40		SCN68562CxN48
Plastic LCC		SCN68562CxPLCC	

Advance Information

FEATURES

General Features
- o Dual full-duplex synchronous/asynchronous receiver and transmitter
- o Multi-protocol operation
  - BOP: HDLC/ADCCP, SDLC, X.25 or X.75 link level, etc.
  - COP: BISYNC, DDCMP, X.21
  - ASYNC: 5-8 bits plus optional parity
- o Four character receiver and transmitter FIFOs
- o Programmable bit rate for each receiver and transmitter selectable from:
  - 16 fixed rates: 50 to 38.4K baud
  - One user defined rate derived from programmable counter/timer
  - External 1x or 16x clock
  - Digital phase locked loop
- o 0 to 4MHz data rate
- o Parity and FCS (frame check sequence) LRC or CRC generation and checking
- o Programmable data encoding/decoding: NRZ, NRZI, FM0, FM1, Manchester
- o Programmable channel mode: full/half duplex, auto-echo, or local loopback
- o Programmable data transfer mode: polled, interrupt, DMA, wait
- o DMA interface
  - Compatible with Signetics 68430 Direct Memory Access Interface (DMAI) and other DMA controllers
  - Half or full duplex operation
  - Single or dual address data transfers
  - Automatic frame termination on terminal count or DMA DONE
- o Interrupt capabilities
  - Daisy chain option
  - Vector output (fixed or modified by status)
  - Programmable internal priorities
  - 68K compatible
- o Multi-function programmable 16-bit counter/timer
  - Bit rate generator
  - Event counter
  - Count received or transmitted characters
  - Delay generator
  - Automatic bit length measurement
- o Modem controls
  - RTS, CTS, DCD, and up to four general purpose I/O pins per channel
  - CTS and DCD programmable auto-enables for Tx and Rx
  - Programmable interrupt on change of CTS or DCD
- o On-chip oscillator for crystal
- o TTL compatible
- o Single +5V power supply
- o 40/48-pin DIP

Asynchronous Mode Features
- o Character length: 5 to 8 bits
- o Odd or even parity, no parity, or force parity
- o Up to two stop bits programmable in 1/16 bit increments
- o 1x or 16x Rx and Tx clock factors
- o Parity, overrun, and framing error detection
- o False start bit detection
- o Start bit search 1/2 bit time after framing error detection
- o Break generation with handshake for counting break characters
- o Detection of start and end of received break
- o Character compare with optional interrupt on match

Character Oriented Protocol Features
- o Character length: 5 to 8 bits
- o Odd or even parity, no parity, or force parity
- o LRC or CRC generation and checking
- o Optional opening PAD transmission
- o One or two SYN characters
- o External sync capability
- o SYN detection and optional stripping
- o SYN or MARK linefill on underrun
- o Idle in MARK or SYNs
- o Parity, FCS, overrun, and underrun error detection
- o BISYNC Features
  - EBCDIC or ASCII text messages
  - SYN, DLE stripping
  - EOM (end of message) detection and transmission
  - Auto transparency mode switching
  - Auto hunt after receipt of EOM sequence
  - Control character sequence detection for both transparent and normal text

Bit Oriented Protocol Features
- o Character length: 5 to 8 bits
- o Detection and transmission of residual character: 0-7 bits
- o Automatic switch to programmed character length for I field
- o Zero insertion and deletion
- o Optional opening PAD transmission
- o Detection and generation of FLAG, ABORT, and IDLE bit patterns
- o Detection and generation of shared (single) FLAG between frames
- o Detection of overlapping (shared zero) FLAGs
- o ABORT, ABORT-FLAGs, or FCS-FLAGs line fill on underrun
- o Idle in MARK or FLAGs
- o Secondary address recognition including group and global address
- o Single or dual octet secondary address
- o Extended address and control fields
- o Short frame rejection for receiver
- o Detection and notification of received end of message
- o CRC generation and checking

Advance Information

BLOCK DIAGRAM

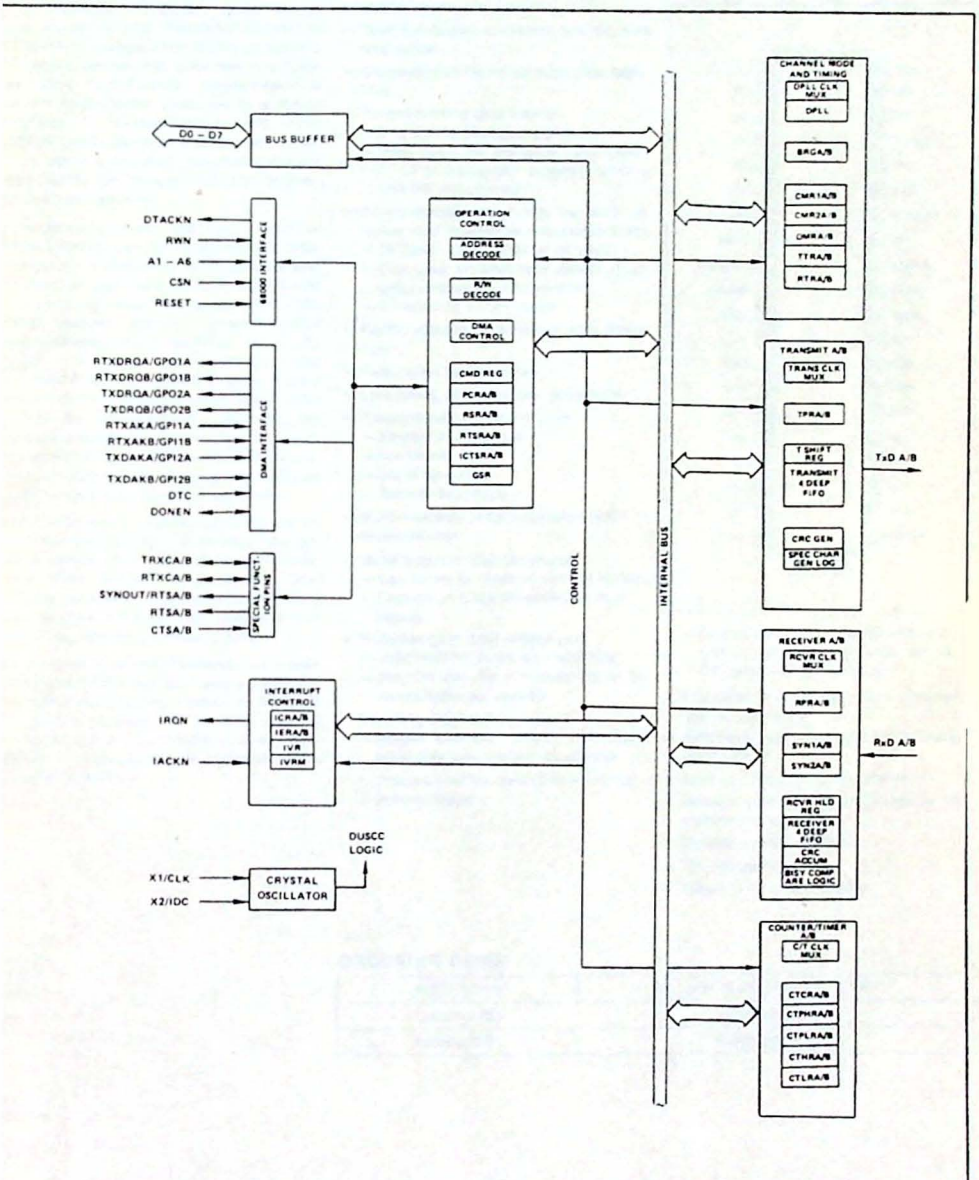

Preliminary

DESCRIPTION

The Signetics SCN68681 Dual Universal Asynchronous Receiver/Transmitter (DUART) is a single chip MOS-LSI communications device that provides two independent full-duplex asynchronous receiver/transmitter channels in a single package. It is compatible with other S68000 family devices, and can also interface easily with other microprocessors. The DUART can be used in polled or interrupt driven systems.

The operating mode and data format of each channel can be programmed independently. Additionally, each receiver and transmitter can select its operating speed as one of eighteen fixed baud rates, a 16x clock derived from a programmable counter/timer, or an external 1x or 16x clock. The baud rate generator and counter/timer can operate directly from a crystal or from external clock inputs. The ability to independently program the operating speed of the receiver and transmitter make the DUART particularly attractive for dual-speed channel applications such as clustered terminal systems.

Each receiver is quadruply buffered to minimize the potential of receiver overrun or to reduce interrupt overhead in interrupt driven systems. In addition, a flow control capability is provided to disable a remote DUART transmitter when the buffer of the receiving device is full.

Also provided on the SCN68681 are a multipurpose 6-bit input port and a multipurpose 8-bit output port. These can be used as general purpose I/O ports or can be assigned specific functions (such as clock inputs or status/interrupt outputs) under program control.

FEATURES

- S68000 bus compatible
- Dual full-duplex asynchronous receiver/transmiter
- Quadruple buffered receiver data registers
- Programmable data format
  - —5 to 8 data bits plus parity
  - —Odd, even, no parity or force parity
  - —1, 1.5 or 2 stop bits programmable in 1/16 bit increments
- Programmable baud rate for each receiver and transmiter selectable from:
  - —18 fixed rates: 50 to 38.4K baud
  - —One user defined rate derived from programmable timer/counter
  - —External 1x or 16x clock
- Parity, framing, and overrun error detection
- False start bit detection
- Line break detection and generation
- Programmable channel mode
  - —Normal (full duplex)
  - —Automatic echo
  - —Local loopback
  - —Remote loopback
- Multi-function programmable 16-bit counter/timer
- Multi-function 6-bit input port
  - —Can serve as clock or control inputs
  - —Change of state detection on four inputs
- Multi-function 8-bit output port
  - —Individual bit set/reset capability
  - —Outputs can be programmed to be status/interrupt signals
- Versatile interrupt system
  - —Single interrupt output with eight maskable interrupting conditions
  - —Interrupt vector output on interrupt acknowledge

PIN CONFIGURATION

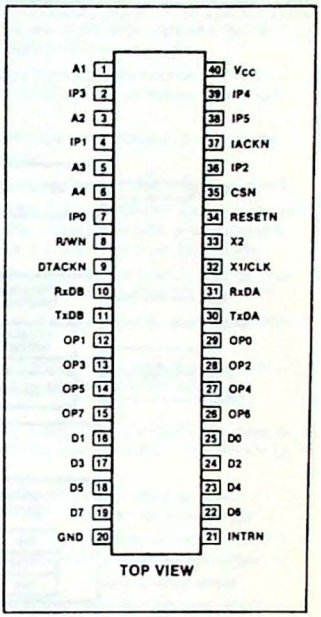

  - —Output port can be configured to provide a total of up to six separate wire-OR'able interrupt outputs
- Maximum data transfer: 1X — 1MB/sec, 16X — 125KB/sec
- Automatic wake-up mode for multidrop applications
- Start-end break interrupt/status
- Detects break which originates in the middle of a character
- On-chip crystal oscillator
- TTL compatible
- Single +5V power supply

ORDERING CODE

PACKAGES	V_{CC} = 5V ± 5%, T_A = 0°C to 70°C
Ceramic DIP	SCN68681C1I40
Plastic DIP	SCN68681C1N40

Preliminary

BLOCK DIAGRAM

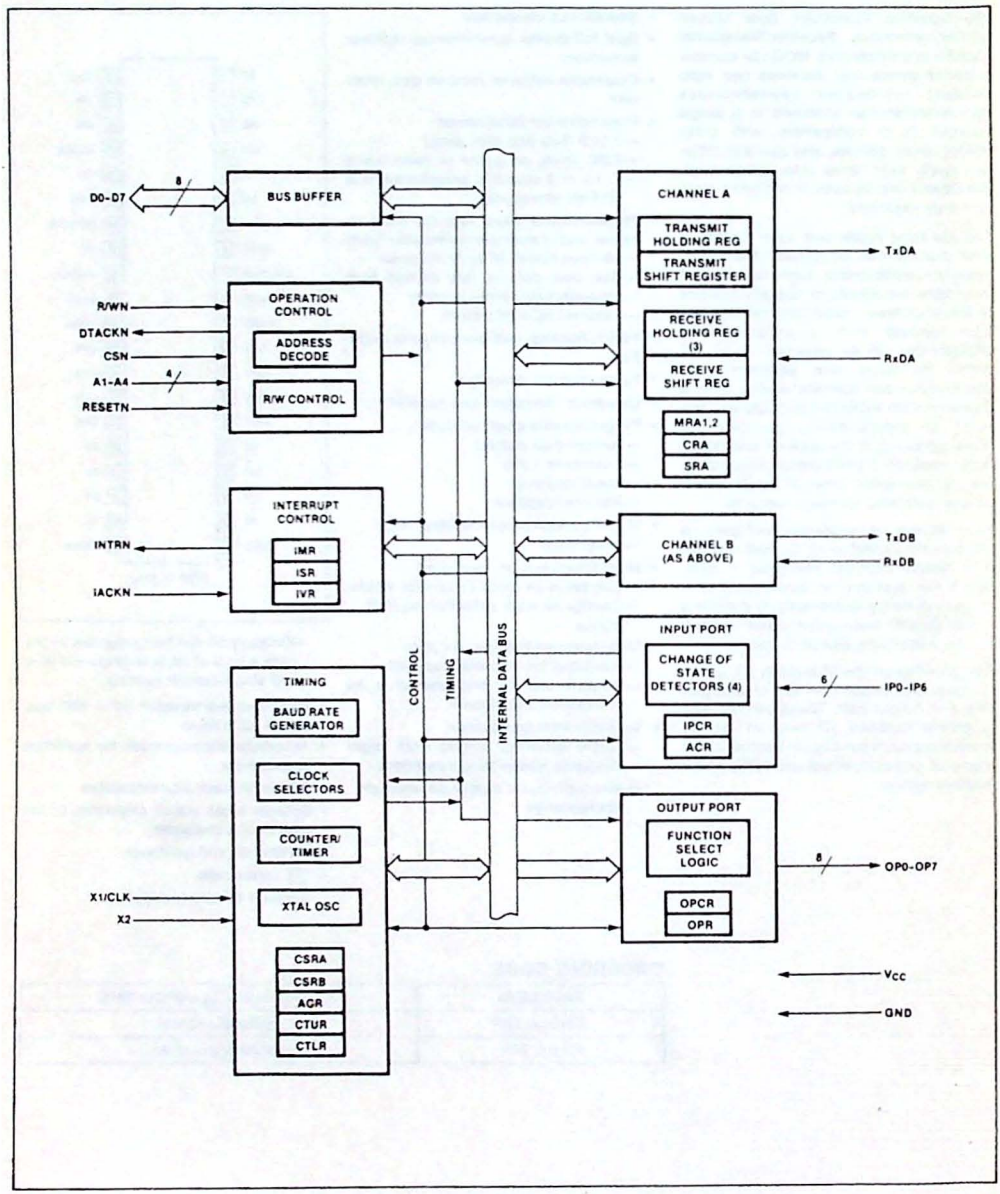

FPreliminary

FPIN DESIGNATION

MNEMONIC	PIN NO.	TYPE	NAME AND FUNCTION
D0-D7	25-22, 16-19	I/O	**Data Bus:** Bidirectional 3-state data bus used to transfer commands, data and status between the DUART and the CPU. D0 is the least significant bit.
CSN	35	I	**Chip Select:** Active low input signal. When low, data transfers between the CPU and the DUART are enabled on D0-D7 as controlled by the R/WN and A1-A4 inputs. When high, places the D0-D7 lines in the 3-state condition.
R/WN	8	I	**Read/Write:** A high input indicates a read cycle and a low input indicates a write cycle, when a cycle is initiated by assertion of the CSN input.
A1-A4	1, 3, 5, 6	I	**Address Inputs:** Select the DUART internal registers and ports for read/write operations.
RESETN	34	I	**Reset:** A low clears internal registers (SRA, SRB, IMR, ISR, OPR, OPCR), initializes the IVR to hex 0F, puts OP0-OP7 in the high state, stops the counter/timer, and puts channel A and B in the inactive state, with the TxDA and TxDB outputs in the mark (high) state.
DTACKN	9	O	**Data Transfer Acknowledge:** Three-state active low output asserted in write, read, or interrupt cycles to indicate proper transfer of data between the CPU and the DUART.
INTRN	21	O	**Interrupt Request:** Active low, open drain output which signals the CPU that one or more of the eight maskable interrupting conditions are true.
IACKN	37	I	**Interrupt Acknowledge:** Active low input indicating an interrupt acknowledge cycle. In response, the DUART will place the interrupt vector on the data bus and will assert DTACKN if it has an interrupt pending.
X1/CLK	32	I	**Crystal 1:** Crystal or external clock input. A crystal or clock of the specified limits must be supplied at all times. If a crystal is used, a capacitor must be connected from this pin to ground (see figure 7).
X2	33	I	**Crystal 2:** Connection for other side of the crystal. Should be connected to ground if a crystal is not used. If a crystal is used, a capacitor must be connected from this pin to ground (see figure 7).
RxDA	31	I	**Channel A Receiver Serial Data Input:** The least significant bit is received first. 'Mark' is high, 'space' is low.
RxDB	10	I	**Channel B Receiver Serial Data Input:** The least significant bit is received first. 'Mark' is high, 'space' is low.
TxDA	30	O	**Channel A Transmitter Serial Data Output:** The least significant bit is transmitted first. This output is held in the 'mark' condition when the transmitter is disabled, idle, or when operating in local loopback mode. 'Mark' is high, 'space' is low.
TxDB	11	O	**Channel B Transmitter Serial Data Output:** The least significant bit is transmitted first. This output is held in the 'mark' condition when the transmitter is disabled, idle, or when operating in local loopback mode. 'Mark' is high, 'space' is low.
OP0	29	O	**Output 0.** General purpose output, or channel A request to send (RTSAN, active low). Can be deactivated automatically on receive or transmit.
OP1	12	O	**Output 1:** General purpose output, or channel B request to send (RTSBN, active low). Can be deactivated automatically on receive or transmit.
OP2	28	O	**Output 2:** General purpose output, or channel A transmitter 1X or 16X clock output, or channel A receiver 1X clock output.
OP3	13	O	**Output 3:** General purpose output, or open drain, active low counter/timer output, or channel B transmitter 1X clock output, or channel B receiver 1X clock output.
OP4	27	O	**Output 4:** General purpose output, or channel A open drain, active low, RxRDYA/FFULLA output.

Preliminary

PIN DESIGNATION (Continued)

MNEMONIC	PIN NO.	TYPE	NAME AND FUNCTION
OP5	14	O	**Output 5:** General purpose output, or channel B open drain, active low, RxRDYB/FFULLB output.
OP6	26	O	**Output 6:** General purpose output, or channel A open drain, active low, TxRDYA output.
OP7	15	O	**Output 7:** General purpose output, or channel B open drain, active low, TxRDYB output.
IP0	7	I	**Input 0:** General purpose input, or channel A clear to send active low input (CTSAN).
IP1	4	I	**Input 1:** General purpose input, or channel B clear to send active low input (CTSBN).
IP2	36	I	**Input 2:** General purpose input, or channel B receiver external clock input (RxCB), or counter/timer external clock input. When the external clock is used by the receiver, the received data is sampled on the rising edge of the clock.
IP3	2	I	**Input 3:** General purpose input, or channel A transmitter external clock input (TxCA). When the external clock is used by the transmitter, the transmitted data is clocked on the falling edge of the clock.
IP4	39	I	**Input 4:** General purpose input, or channel A receiver external clock input (RxCA). When the external clock is used by the receiver, the received data is sampled on the rising edge of the clock.
IP5	38	I	**Input 5:** General purpose input, or channel B transmitter external clock input (TxCB). When the external clock is used by the transmitter, the transmitted data is clocked on the falling edge of the clock.
V_{CC}	40	I	**Power Supply:** +5V supply input.
GND	20	I	**Ground**

BLOCK DIAGRAM

The SCN68681 DUART consists of the following eight major sections: data bus buffer, operation control, interrupt control, timing, communications channels A and B, input port and output port. Refer to the block diagram.

Data Bus Buffer

The data bus buffer provides the interface between the external and internal data busses. It is controlled by the operation control block to allow read and write operations to take place between the controlling CPU and the DUART.

Operation Control

The operation control logic receives operation commands from the CPU and generates appropriate signals to internal sections to control device operation. It contains address decoding and read and write circuits to permit communications with the microprocessor via the data bus buffer. The DTACKN output is asserted during write and read cycles to indicate to the CPU that data has been latched on a write cycle, or that valid data is present on the bus on a read cycle.

Interrupt Control

A single active low interrupt output (INTRN) is provided which is activated upon the occurrence of any of eight internal events. Associated with the interrupt system are the interrupt mask register (IMR), the interrupt status register (ISR), the auxiliary control register (ACR), and the interrupt vector register (IVR). The IMR may be programmed to select only certain conditions to cause INTRN to be asserted. The ISR can be read by the CPU to determine all currently active interrupting conditions. When IACKN is asserted, and the DUART has an interrupt pending, the DUART responds by placing the contents of the IVR register on the data bus and asserting DTACKN.

Outputs OP3–OP7 can be programmed to provide discrete interrupt outputs for the transmitters, receivers, and counter/timer.

Timing Circuits

The timing block consists of a crystal oscillator, a baud rate generator, a programmable 16-bit counter/timer, and four clock selectors. The crystal oscillator operates directly from a 3.6864MHz crystal connected across the X1/CLK and X2 inputs. If an external clock of the appropriate frequency is available, it may be connected to X1/CLK. The clock serves as the basic timing reference for the baud rate generator (BRG), the counter/timer, and other internal circuits. A clock signal within the limits specified in the specifications section of this data sheet must always be supplied to the DUART.

The baud rate generator operates from the oscillator or external clock input and is capable of generating 18 commonly used data communications baud rates ranging from 50 to 38.4K baud. The clock outputs from the BRG are at 16X the actual baud rate. The counter/timer can be used as a timer to produce a 16X clock for any other baud rate by counting down the crystal clock or an external clock. The four clock selectors allow the independent selection, for each receiver and transmitter, of any of these baud rates or an external timing signal.

The counter/timer (C/T) can be programmed to use one of several timing sources as its input. The output of the C/T is available to the clock selectors and can also be programmed to be output at OP3. In the counter mode, the contents of the C/T can be read by the CPU and it can be stopped and started under program control. In the timer mode, the C/T acts as a programmable divider.

Preliminary

Communications Channels A and B

Each communications channel of the SCN68681 comprises a full duplex asynchronous receiver/transmitter (UART). The operating frequency for each receiver and transmitter can be selected independently from the baud rate generator, the counter timer, or from an external input.

The transmitter accepts parallel data from the CPU, converts it to a serial bit stream, inserts the appropriate start, stop, and optional parity bits and outputs a composite serial stream of data on the TxD output pin. The receiver accepts serial data on the RxD pin, converts this serial input to parallel format, checks for start bit, stop bit, parity bit (if any), or break condition and sends an assembled character to the CPU.

Input Port

These inputs to this unlatched 6-bit port can be read by the CPU by performing a read operation at address D_{16}. A high input results in a logic 1 while a low input results in a logic 0. D7 will always be read as a logic 1 and D6 will reflect the level of ACCKN. The pins of this port can also serve as auxiliary inputs to certain portions of the DUART logic.

Four change-of-state detectors are provided which are associated with inputs P33, IP2, IP1, and IP0. A high-to-low or low-to-high transition of these inputs lasting longer than 25-50μs will set the corresponding bit in the input port change register. The bits are cleared when the register is read by the CPU. Any change of state can also be programmed to generate an interrupt to the CPU.

Output Port

The 8-bit multi-purpose output port can be used as a general purpose output port, in which case the outputs are the complements of the output port register (OPR). OPR[n] = 1 results in OP[n] = low and vice-versa. Bits of the OPR can be individually set and reset. A bit is set by performing a write operation at address E_{16} with the accompanying data specifying the bits to be set (1 = set, 0 = no change). Likewise, a bit is reset by a write at address F_{16} with the accompanying data specifying the bits to be reset (1 = reset, 0 = no change).

Outputs can be also individually assigned specific functions by appropriate programming of the channel A mode registers (MR1A, MR2A), the channel B mode registers (MR1B, MR2B), and the output port configuration register (OPCR).

OPERATION

Transmitter

The SCN68681 is conditioned to transmit data when the transmitter is enabled through the command register. The SCN68681 indicates to the CPU that it is ready to accept a character by setting the TxRDY bit in the status register. This condition can be programmed to generate an interrupt request at OP6 or OP7 and INTRN. When a character is loaded into the transmit holding register (THR), the above conditions are negated. Data is transferred from the holding register to the transmit shift register when it is idle or has completed transmission of the previous character. The TxRDY conditions are then asserted again which means one full character time of buffering is provided. Characters cannot be loaded into the THR while the transmitter is disabled.

The transmitter converts the parallel data from the CPU to a serial bit stream on the TxD output pin. It automatically sends a start bit followed by the programmed number of data bits, an optional parity bit, and the programmed number of stop bits. The least significant bit is sent first. Following the transmission of the stop bits, if a new character is not available in the THR, the TxD output remains high and the TxEMT bit in the status register (SR) will be set to 1. Transmission resumes and the TxEMT bit is cleared when the CPU loads a new character into the THR. If the transmitter is disabled, it continues operating until the character currently being transmitted is completely sent out. The transmitter can be forced to send a continuous low condition by issuing a send break command.

The transmitter can be reset through a software command. If it is reset, operation ceases immediately and the transmitter must be enabled through the command register before resuming operation. If CTS operation is enabled, the CTSN input must be low in order for the character to be transmitted. if it goes high in the middle of a transmission, the character in the shift register is transmitted and TxDA then remains in the marking state until CTSN goes low. The transmitter can also control the deactivation of the RTSN output. If programmed, the RTSN output will be reset one bit time after the character in the transmit shift register and transmit holding register (if any) are completely transmitted, if the transmitter has been disabled.

Receiver

The SCN68681 is conditioned to receive data when enabled through the command register. The receiver looks for a high to low (mark to space) transition of the start bit on the RxD input pin. If a transition is detected, the state of the RxD pin is sampled each 16X clock for 7-1/2 clocks (16X clock mode) or at the next rising edge of the bit time clock (1X clock mode). If RxD is sampled high, the start bit is invalid and the search for a valid start bit begins again. If RxD is still low, a valid start bit is assumed and the receiver continues to sample the input at one bit time intervals at the theoretical center of the bit, until the proper number of data bits and the parity bit (if any) have been assembled, and one stop bit has been detected. The least significant bit is received first. The data is then transferred to the receive holding register (RHR) and the RxRDY bit in the SR is set to a 1. This condition can be programmed to generate an interrupt at OP4 or OP5 and INTRN. If the character length is less than eight bits, the most significant unused bits in the RHR are set to zero.

After the stop bit is detected, the receiver will immediately look for the next start bit. However, if a non-zero character was received without a stop bit (framing error) and RxD remains low for one half of the bit period after the stop bit was sampled, then the receiver operates as if a new start bit transition had been detected at that point (one-half bit time after the stop bit was sampled).

The parity error, framing error, overrun error and received break state (if any) are strobed into the SR at the received character boundary, before the RxRDY status bit is set. If a break condition is detected (RxD is low for the entire character including the stop bit), a character consisting of all zeros will be loaded into the RHR and the received break bit in the SR is set to 1. The RxD input must return to a high condition for at least one-half bit time before a search for the next start bit begins.

The RHR consists of a first-in-first-out (FIFO) stack with a capacity of three characters. Data is loaded from the receive shift register into the topmost empty position of the FIFO. The RxRDY bit in the status register is set whenever one or more characters are available to be read, and a FFULL status bit is set if all three stack positions are filled with data. Either of these bits can be selected to cause an interrupt. A read of the RHR outputs the

Preliminary

data at the top of the FIFO. After the read cycle, the data FIFO and its associated status bits (see below) are 'popped' thus emptying a FIFO position for new data.

In addition to the data word, three status bits (parity error, framing error, and received break) are also appended to each data character in the FIFO (overrun is not). Status can be provided in two ways, as programmed by the error mode control bit in the mode register. In the 'character' mode, status is provided on a character-by-character basis, the status applies only to the character at the top of the FIFO. In the 'block' mode, the status provided in the SR for these three bits is the logical OR of the status for all characters coming to the top of the FIFO since the last 'reset error' command was issued. In either mode reading the SR does not affect the FIFO. The FIFO is 'popped' only when the RHR is read. Therefore the status register should be read prior to reading the FIFO.

If the FIFO is full when a new character is received, that character is held in the receive shift register until a FIFO position is available. If an additional character is received while this state exits, the contents of the FIFO are not affected: the character previously in the shift register is lost and the overrun error status bit (SR[4]) will be set upon receipt of the start bit of the new (overruning) character.

The receiver can control the deactivation of RTS. If programmed to operate in this mode, the RTSN output will be negated when a valid start bit was received and the FIFO is full. When a FIFO position becomes available, the RTSN output will be re-asserted automatically. This feature can be used to prevent an overrun, in the receiver, by connecting the RTSN output to the CTSN input of the transmitting device.

If the receiver is disabled, the FIFO characters can be read. However, no additional characters can be received until the receiver is enabled again. If the receiver is reset, the FIFO and all of the receiver status, and the corresponding output ports and interrupt are reset. No additional characters can be received until the receiver is enabled again.

Multidrop Mode

The DUART is equipped with a wake up mode used for multidrop applications. This mode is selected by programming bits MR1A[4:3] or MR1B[4:3] to '11' for channels A and B respectively. In this mode of operation, a 'master' station transmits an address character followed by data characters for the addressed 'slave' station. The slave stations, with receivers that are normally disabled, examine the received data stream and 'wake-up' the CPU (by setting RxRDY) only upon receipt of an address character. The CPU compares the received address to its station address and enables the receiver if it wishes to receive the subsequent data characters. Upon receipt of another address character, the CPU may disable the receiver to initiate the process again.

A transmitted character consists of a start bit, the programmed number of data bits, an address/data (A/D) bit, and the programmed number of stop bits. The polarity of the transmitted A/D bit is selected by the CPU by programming bit MR1A[2]/MR1B[2]. MR1A[2]/MR1B[2] = 0 transmits a zero in the A/D bit position, which identifies the corresponding data bits as data, while MR1A[2]/MR1B[2] = 1 transmits a one in the A/D bit position, which identifies the corresponding data bits as an address. The CPU should program the mode register prior to loading the corresponding data bits into the THR.

In this mode, the receiver continuously looks at the received data stream, whether it is enabled or disabled. If disabled, it sets the RxRDY status bit and loads the character into the RHR FIFO if the received A/D bit is a one (address tag), but discards the received character if the received A/D bit is a zero (data tag). If enabled, all received characters are transferred to the CPU via the RHR. In either case, the data bits are loaded into the data FIFO while the A/D bit is loaded into the status FIFO position normally used for parity error (SRA[5] or SRB[5]). Framing error, overrun error, and break detect operate normally whether or not the receiver is enabled.

PROGRAMMING

The operation of the DUART is program med by writing control words into the a propriate registers. Operational feedbac is provided via status registers which ca be read by the CPU. The addressing of th registers is described in table 1.

The contents of certain control registe are initialized to zero on RESET. Ca should be exercised if the contents of register are changed during operatio since certain changes may cause oper tional problems. For example, changin the number of bits per character while th transmitter is active may cause the tran mission of an incorrect character. In ge eral, the contents of the MR, the CSR, an the OPCR should only be changed whi the receiver(s) and transmitter(s) are n enabled, and certain changes to the AC should only be made while the C/T stopped.

Mode registers 1 and 2 of each channel a accessed via independent auxiliary poin ers. The pointer is set to MR1x by RESE or by issuing a 'reset pointer'-comman via the corresponding command registe Any read or write of the mode regist while the pointer is at MR1x switches th pointer to MR2x. The pointer then remain at MR2x, so that subsequent accesses a always to MR2x unless the pointer is res to MR1x as described above.

Mode, command, clock select, and statu registers are duplicated for each chann to provide total independent operatio and control. Refer to table 2 for register b descriptions.

Table 1 68681 REGISTER ADDRESSING

A4	A3	A2	A1	READ (R/WN = 1)	WRITE (R/WN = 0)
0	0	0	0	Mode Register A (MR1A, MR2A)	Mode Register A (MR1A, MR2A)
0	0	0	1	Status Register A (SRA)	Clock Select Reg. A (CSRA)
0	0	1	0	*Reserved*	Command Register A (CRA)
0	0	1	1	RX Holding Register A (RHRA)	TX Holding Register A (THRA)
0	1	0	0	Input Port Change Reg. (IPCR)	Aux. Control Register (ACR)
0	1	0	1	Interrupt Status Reg. (ISR)	Interrupt Mask Reg. (IMR)
0	1	1	0	Counter/Timer Upper (CTU)	C/T Upper Register (CTUR)
0	1	1	1	Counter/Timer Lower (CTL)	C/T Lower Register (CTLR)
1	0	0	0	Mode Register B (MR1B, MR2B)	Mode Register B (MR1B, MR2B)
1	0	0	1	Status Register B (SRB)	Clock Select Reg. B (CSRB)
1	0	1	0	*Reserved*	Command Register B (CRB)
1	0	1	1	RX Holding Register B (RHRB)	TX Holding Register B (THRB)
1	1	0	0	Interrupt Vector Reg. (IVR)	Interrupt Vector Reg. (IVR)
1	1	0	1	Input Port	Output Port Conf. Reg. (OPCR)
1	1	1	0	Start Counter Command	Set Output Port Bits Command
1	1	1	1	Stop Counter Command	Reset Output Port Bits Command

Preliminary

Table 2 REGISTER BIT FORMATS

	BIT7	BIT6	BIT5	BIT4	BIT3	BIT2	BIT1	BIT0
	RX RTS CONTROL	RX INT SELECT	ERROR MODE	PARITY MODE		PARITY TYPE	BITS PER CHAR.	
MR1A MR1B	0 = no 1 = yes	0 = RXRDY 1 = FFULL	0 = char 1 = block	00 = with parity 01 = force parity 10 = no parity 11 = multi-drop mode		0 = even 1 = odd	00 = 5 01 = 6 10 = 7 11 = 8	

	BIT7	BIT6	BIT5	BIT4	BIT3	BIT2	BIT1	BIT0
	CHANNEL MODE		Tx RTS CONTROL	CTS ENABLE Tx	STOP BIT LENGTH*			
MR2A MR2B	00 = Normal 01 = Auto echo 10 = Local loop 11 = Remote loop		0 = no 1 = yes	0 = no 1 = yes	0 = 0.563 1 = 0.625 2 = 0.688 3 = 0.750	4 = 0.813 5 = 0.875 6 = 0.938 7 = 1.000	8 = 1.563 9 = 1.625 A = 1.688 B = 1.750	C = 1.813 D = 1.875 E = 1.938 F = 2.000

*Add 0.5 to values shown for 0-7 if channel is programmed for 5 bits/char

	BIT7	BIT6	BIT5	BIT4	BIT3	BIT2	BIT1	BIT0
CSRA	RECEIVER CLOCK SELECT				TRANSMITTER CLOCK SELECT			
CSRB	See text				See text			

	BIT7	BIT6	BIT5	BIT4	BIT3	BIT2	BIT1	BIT0
CRA CRB	not used—must be 0	MISCELLANEOUS COMMANDS			DISABLE Tx	ENABLE Tx	DISABLE Rx	ENABLE Rx
		See text			0 = no 1 = yes	0 = no 1 = yes	0 = no 1 = yes	0 = no 1 = yes

	BIT7	BIT6	BIT5	BIT4	BIT3	BIT2	BIT1	BIT0
	RECEIVED BREAK	FRAMING ERROR	PARITY ERROR	OVERRUN ERROR	TxEMT	TxRDY	FFULL	RxRDY
SRA SRB	0 = no 1 = yes *	0 = no 1 = yes *	0 = no 1 = yes *	0 = no 1 = yes	0 = no 1 = yes	0 = no 1 = yes	0 = no 1 = yes	0 = no 1 = yes

*These status bits are appended to the corresponding data character in the receive FIFO. A read of the status register provides these bits (7-5) from the top of the FIFO together with bits 4-0. These bits are cleared by a 'reset error status' command. In character mode they are discarded when the corresponding data character is read from the FIFO.

	BIT7	BIT6	BIT5	BIT4	BIT3	BIT2	BIT1	BIT0
	OP7	OP6	OP5	OP4	OP3		OP2	
OPCR	0 = OPR[7] 1 = TxRDYB	0 = OPR[6] 1 = TxRDYA	0 = OPR[5] 1 = RxRDY/FFULLB	0 = OPR[4] 1 = RxRDY/FFULLA	00 = OPR[3] 01 = C/T OUTPUT 10 = TxCB (1X) 11 = RxCB (1X)		00 = OPR[2] 01 = TxCA (16X) 10 = TxCA (1X) 11 = RxCA (1X)	

	BIT7	BIT6	BIT5	BIT4	BIT3	BIT2	BIT1	BIT0
	BRG SET SELECT	COUNTER/TIMER MODE AND SOURCE			DELTA IP3 INT	DELTA IP2 INT	DELTA IP1 INT	DELTA IP0 INT
ACR	0 = set1 1 = set2	See table 4			0 = off 1 = on	0 = off 1 = on	0 = off 1 = on	0 = off 1 = on

	BIT7	BIT6	BIT5	BIT4	BIT3	BIT2	BIT1	BIT0
	DELTA IP3	DELTA IP2	DELTA IP1	DELTA IP0	IP3	IP2	IP1	IP0
IPCR	0 = no 1 = yes	0 = no 1 = yes	0 = no 1 = yes	0 = no 1 = yes	0 = low 1 = high	0 = low 1 = high	0 = low 1 = high	0 = low 1 = high

Preliminary

Table 2 REGISTER BIT FORMATS (Continued)

	BIT7	BIT6	BIT5	BIT4	BIT3	BIT2	BIT1	BIT0
ISR	INPUT PORT CHANGE	DELTA BREAK B	RxRDY/ FFULLB	TxRDYB	COUNTER READY	DELTA BREAK A	RxRDY/ FFULLA	TxRDYA
	0 = no 1 = yes	0 = no 1 = yes	0 = no 1 = yes	0 = no 1 = yes	0 = no 1 = yes	0 = no 1 = yes	0 = no 1 = yes	0 = no 1 = yes

	BIT7	BIT6	BIT5	BIT4	BIT3	BIT2	BIT1	BIT0
IMR	IN. PORT CHANGE INT	DELTA BREAK B INT	RxRDY/ FFULLB INT	TxRDYB INT	COUNTER READY INT	DELTA BREAK A INT	RxRDY/ FFULLA INT	TxRDYA INT
	0 = off 1 = on	0 = off 1 = on	0 = off 1 = on	0 = off 1 = on	0 = off 1 = on	0 = off 1 = on	0 = off 1 = on	0 = off 1 = on

	BIT7	BIT6	BIT5	BIT4	BIT3	BIT2	BIT1	BIT0
CTUR	C/T[15]	C/T[14]	C/T[13]	C/T[12]	C/T[11]	C/T[10]	C/T[9]	C/T[8]

	BIT7	BIT6	BIT5	BIT4	BIT3	BIT2	BIT1	BIT0
CTLR	C/T[7]	C/T[6]	C/T[5]	C/T[4]	C/T[3]	C/T[2]	C/T[1]	C/T[0]

	BIT7	BIT6	BIT5	BIT4	BIT3	BIT2	BIT1	BIT0
IVR	IVR[7]	IVR[6]	IVR[5]	IVR[4]	IVR[3]	IVR[2]	IVR[1]	IVR[0]

MR1A — Channel A Mode Register 1

MR1A is accessed when the channel A MR pointer points to MR1. The pointer is set to MR1 by RESET or by a 'set pointer' command applied via CRA. After reading or writing MR1A, the pointer will point to MR2A.

MR1A[7] — Channel A Receiver Request-to-Send Control — This bit controls the deactivation of the RTSAN output (OP0) by the receiver. This output is normally asserted by setting OPR[0] and negated by resetting OPR[0]. MR1A[7] = 1 causes RTSAN to be negated upon receipt of a valid start bit if the channel A FIFO is full. However, OPR[0] is not reset and RTSAN will be asserted again when an empty FIFO position is available. This feature can be used for flow control to prevent overrun in the receiver by using the RTSAN output signal to control the CTSN input of the transmitting device.

MR1A[6] — Channel A Receiver Interrupt Select — This bit selects either the channel A receiver ready status (RXRDY) or the channel A FIFO full status (FFULL) to be used for CPU interrupts. It also causes the selected bit to be output on OP4 if it is programmed as an interrupt output via the OPCR.

MR1A[5] — Channel A Error Mode Select — This bit selects the operating mode of the three FIFOed status bits (FE, PE, received break) for channel A. In the 'character' mode, status is provided on a character-by-character basis: the status applies only to the character at the top of the FIFO. In the 'block' mode, the status provided in the SR for these bits is the accumulation (logical OR) of the status for all characters coming to the top of the FIFO since the last 'reset error' command for channel A was issued.

MR1A[4:3] — Channel A Parity Mode Select — If 'with parity' or 'force parity' is selected, a parity bit is added to the transmitted character and the receiver performs a parity check on incoming data. MR1A[4:3] = 11 selects channel A to operate in the special multidrop mode described in the Operation section.

MR1A[2] — Channel A Parity Type Select — This bit selects the parity type (odd or even) if the 'with parity' mode is programmed by MR1A[4:3], and the polarity of the forced parity bit if the 'force parity' mode is programmed. It has no effect if the 'no parity' mode is programmed. In the special multidrop mode it selects the polarity of the A/D bit.

MR1A[1:0] — Channel A Bits per Character Select — This field selects the number of data bits per character to be transmitted and received. The character length does not include the start, parity, and stop bits.

VALVO

Preliminary

MR2A — Channel A Mode Register 2

MR2A is accessed when the channel A MR pointer points to MR2, which occurs after any access to MR1A. Accesses to MR2A do not change the pointer.

MR2A[7:6] — Channel A Mode Select — Each channel of the DUART can operate in one of four modes. MR2A[7:6] = 00 is the normal mode, with the transmitter and receiver operating independently. MR2A[7:6] = 01 places the channel in the automatic echo mode, which automatically retransmits the received data. The following conditions are true while in automatic echo mode:

1. Received data is reclocked and retransmitted on the TxDA output.
2. The receive clock is used for the transmitter.
3. The receiver must be enabled, but the transmitter need not be enabled.
4. The channel A TxRDY and TxEMT status bits are inactive.
5. The received parity is checked, but is not regenerated for transmission, i.e., transmitted parity bit is as received.
6. Character framing is checked, but the stop bits are retransmitted as received.
7. A received break is echoed as received until the next valid start bit is detected.
8. CPU to receiver communication continues normally, but the CPU to transmitter link is disabled.

Two diagnostic modes can also be configured. MR2A[7:6] = 10 selects local loopback mode. In this mode:

1. The transmitter output is internally connected to the receiver input.
2. The transmit clock is used for the receiver.
3. The TxDA output is held high.
4. The RxDA input is ignored.
5. The transmitter must be enabled, but the receiver need not be enabled.
6. CPU to transmitter and receiver communications continue normally.

The second diagnostic mode is the remote loopback mode, selected by MR2A[7:6] = 11. In this mode:

1. Received data is reclocked and retransmitted on the TxDA output.
2. The receive clock is used for the transmitter.
3. Received data is not sent to the local CPU, and the error status conditions are inactive.
4. The received parity is not checked and is not regenerated for transmission, i.e., transmitted parity bit is as received.
5. The receiver must be enabled.
6. Character framing is not checked, and the stop bits are retransmitted as received.
7. A received break is echoed as received until the next valid start bit is detected.

The user must exercise care when switching into and out of the various modes. The selected mode will be activated immediately upon mode selection, even if this occurs in the middle of a received or transmitted character. Likewise, if a mode is deselected, the device will switch out of the mode immediately. An exception to this is switching out of autoecho or remote loopback modes: if the de-selection occurs just after the receiver has sampled the stop bit (indicated in autoecho by assertion of RxRDY), and the transmitter is enabled, the transmitter will remain in autoecho mode until the entire stop bit has been retransmitted.

MR2A[5] — Channel A Transmitter Request-to-Send Control — This bit controls the deactivation of the RTSAN output (OP0) by the transmitter. This output is normally asserted by setting OPR[0] and negated by resetting OPR[0]. MR2A[5] = 1 causes OPR[0] to be reset automatically one bit time after the characters in the channel A transmit shift register and in the THR, if any, are completely transmitted, including the programmed number of stop bits, if the transmitter is not enabled. This feature can be used to automatically terminate the transmission of a message as follows:

1. Program auto-reset mode: MR2A[5] = 1.
2. Enable transmitter.
3. Assert RTSAN: OPR[0] = 1.
4. Send message.
5. Disable transmitter after the last character is loaded into the channel A THR.
6. The last character will be transmitted and OPR[0] will be reset one bit time after the last stop bit, causing RTSAN to be negated.

MR2A[4] — Channel A Clear-to-Send Control — If this bit is 0, CTSAN has no effect on the transmitter. If this bit is a 1, the transmitter checks the state of CTSAN (IP0) each time it is ready to send a character. If IP0 is asserted (low), the character is transmitted. If it is negated (high), the TxDA output remains in the marking state and the transmission is delayed until CTSAN goes low. Changes in CTSAN while a character is being transmitted do not affect the transmission of that character.

MR2A[3:0] — Channel A Stop Bit Length Select — This field programs the length of the stop bit appended to the transmitted character. Stop bit lengths of 9/16 to 1 and 1-9/16 to 2 bits, in increments of 1/16 bit, can be programmed for character lengths of 6, 7, and 8 bits. For a character length of 5 bits, 1-1/16 to 2 stop bits can be programmed in increments of 1/16 bit. The receiver only checks for a 'mark' condition at the center of the first stop bit position (one bit time after the last data bit, or after the parity bit if parity is enabled) in all cases.

If an external 1X clock is used for the transmitter, MR2A[3] = 0 selects one stop bit and MR2A[3] = 1 selects two stop bits to be transmitted.

MR1B — Channel B Mode Register 1

MR1B is accessed when the channel B MR pointer points to MR1. The pointer is set to MR1 by RESET or by a 'set pointer' command applied via CRB. After reading or writing MR1B, the pointer will point to MR2B.

The bit definitions for this register are identical to the bit definitions for MR1A, except that all control actions apply to the channel B receiver and transmitter and the corresponding inputs and outputs.

MR2B — Channel B Mode Register 2

MR2B is accessed when the channel B MR pointer points to MR2, which occurs after any access to MR1B. Accesses to MR2B do not change the pointer.

The bit definitions for this register are identical to the bit definitions for MR2A, except that all control actions apply to the channel B receiver and transmitter and the corresponding inputs and outputs.

CSRA — Channel A Clock Select Register

CSRA[7:4] — Channel A Receiver Clock Select — This field selects the baud rate clock for the channel A receiver as follows:

Preliminary

CSRA[7:4]	Baud Rate Clock = 3.6864MHz ACR[7] = 0	ACR[7] = 1
0 0 0 0	50	75
0 0 0 1	110	110
0 0 1 0	134.5	134.5
0 0 1 1	200	150
0 1 0 0	300	300
0 1 0 1	600	600
0 1 1 0	1,200	1,200
0 1 1 1	1,050	2,000
1 0 0 0	2,400	2,400
1 0 0 1	4,800	4,800
1 0 1 0	7,200	1,800
1 0 1 1	9,600	9,600
1 1 0 0	38.4K	19.2K
1 1 0 1	Timer	Timer
1 1 1 0	IP4—16X	IP4—16X
1 1 1 1	IP4—1X	IP4—1X

The receiver clock is always a 16X clock except for CSRA[7:4] = 1111.

CSRA[3:0] — Channel A Transmitter Clock Select — This field selects the baud rate clock for the channel A transmitter. The field definition is as per CSRA[7:4] except as follows:

CSRA[3:0]	Baud Rate ACR[7] = 0	ACR[7] = 1
1 1 1 0	IP3—16X	IP3—16X
1 1 1 1	IP3—1X	IP3—1X

The transmitter clock is always a 16X clock except for CSRA[3:0] = 1111.

CSRB — Channel B Clock Select Register

CSRB[7:4] — Channel B Receiver Clock Select — This field selects the baud rate clock for the channel B receiver. The field definition is as per CSRA[7:4] except as follows:

CSRB[7:4]	Baud Rate ACR[7] = 0	ACR[7] = 1
1 1 1 0	IP2—16X	IP2—16X
1 1 1 1	IP2—1X	IP2—1X

The receiver clock is always a 16X clock except for CSRB[7:4] = 1111.

CSRB[3:0] — Channel B Transmitter Clock Select — This field selects the baud rate clock for the channel B transmitter. The field definition is as per CSRA[7:4] except as follows:

CSRB[3:0]	Baud Rate ACR[7] = 0	ACR[7] = 1
1 1 1 0	IP5—16X	IP5—16X
1 1 1 1	IP5—1X	IP5—1X

The transmitter clock is always a 16X clock except for CSRB[3:0] = 1111.

CRA — Channel A Command Register

CRA is a register used to supply commands to channel A. Multiple commands can be specified in a single write to CRA as long as the commands are non-conflicting, e.g., the 'enable transmitter' and 'reset transmitter' commands cannot be specified in a single command word.

CRA[6:4] — Channel A Miscellaneous Commands — The encoded value of this field may be used to specify a single command as follows:

CRA[6:4]	COMMAND
0 0 0	No command.
0 0 1	Reset MR pointer. Causes the channel A MR pointer to point to MR1.
0 1 0	Reset receiver. Resets the channel A receiver as if a hardware reset had been applied. The receiver is disabled and the FIFO is flushed.
0 1 1	Reset transmitter. Resets the channel A transmitter as if a hardware reset had been applied.
1 0 0	Reset error status. Clears the channel A Received Break, Parity Error, Framing Error, and Overrun Error bits in the status register (SRA[7:4]). Used in character mode to clear OE status (although RB, PE, and FE bits will also be cleared) and in block mode to clear all error status after a block of data has been received.
1 0 1	Reset channel A break change interrupt. Causes the channel A break detect change bit in the interrupt status register (ISR[2]) to be cleared to zero.
1 1 0	Start break. Forces the TXDA output low (spacing). If the transmitter is empty the start of the break condition will be delayed up to two bit times. If the transmitter is active the break begins when transmission of the character is completed. If a character is in the THR, the start of the break will be delayed until that character, or any others loaded subsequently are transmitted. The transmitter must be enabled for this command to be accepted.
1 1 1	Stop Break. The TXDA line will go high (marking) within two bit times. TXDA will remain high for one bit time before the next character, if any, is transmitted.

CRA[3] — Disable Channel A Transmitter — This command terminates transmitter operation and resets the TxRDY and TxEMT status bits. However, if a character is being transmitted or if a character is in the THR when the transmitter is disabled, the transmission of the character(s) is completed before assuming the inactive state.

CRA[2] — Enable Channel A Transmitter — Enables operation of the channel A transmitter. The TxRDY status bit will be asserted.

CRA[1] — Disable Channel A Receiver — This command terminates operation of the receiver immediately — a character being received will be lost. The command has no effect on the receiver status bits or any other control registers. If the special multidrop mode is programmed, the receiver operates even if it is disabled. See Operation section.

CRA[0] — Enable Channel A Receiver — Enables operation of the channel A receiver. If not in the special wakeup mode, this also forces the receiver into the search for start-bit state.

CRB — Channel B Command Register

CRB is a register used to supply commands to channel B. Multiple commands can be specified in a single write to CRB as long as the commands are non-conflicting, e.g., the 'enable transmitter' and 'reset transmitter' commands cannot be specified in a single command word.

The bit definitions for this register are identical to the bit definitions for CRA, except that all control actions apply to the channel B receiver and transmitter and the corresponding inputs and outputs.

SRA — Channel A Status Register

SRA[7] — Channel A Received Break — This bit indicates that an all zero character of the programmed length has been received without a stop bit. Only a single FIFO position is occupied when a break is received: further entries to the FIFO are inhibited until the RxDA line returns to the marking state for at least one-half a bit time (two successive edges of the internal or external 1x clock).

Preliminary

When this bit is set, the channel A 'change in break' bit in the ISR (ISR[2]) is set. ISR[2] is also set when the end of the break condition, as defined above, is detected.

The break detect circuitry can detect breaks that originate in the middle of a received character. However, if a break begins in the middle of a character, it must persist until at least the end of the next character time in order for it to be detected.

SRA[6] — Channel A Framing Error — This bit, when set, indicates that a stop bit was not detected when the corresponding data character in the FIFO was received. The stop bit check is made in the middle of the first stop bit position.

SRA[5] — Channel A Parity Error — This bit is set when the 'with parity' or 'force parity' mode is programmed and the corresponding character in the FIFO was received with incorrect parity.

In the special multidrop mode the parity error bit stores the received A/D bit.

SRA[4] — Channel A Overrun Error — This bit, when set, indicates that one or more characters in the received data stream have been lost. It is set upon receipt of a new character when the FIFO is full and a character is already in the receive shift register waiting for an empty FIFO position. When this occurs, the character in the receive shift register (and its break detect, parity error and framing error status, if any) is lost.

This bit is cleared by a 'reset error status' command.

SRA[3] — Channel A Transmitter Empty (TTxEMTA) — This bit will be set when the channel A transmitter underruns, i.e., both the transmit holding register (THR) and the transmit shift register are empty. It is set after transmission of the last stop bit of a character if no character is in the THR awaiting transmission. It is reset when the THR is loaded by the CPU or when the transmitter is disabled.

SRA[2] — Channel A Transmitter Ready (TTxRDYA) — This bit, when set, indicates that the THR is empty and ready to be loaded with a character. This bit is cleared when the THR is loaded by the CPU and is set when the character is transferred to the transmit shift register. TxRDY is reset when the transmitter is disabled and is set when the transmitter is first enabled, viz., characters loaded into the THR while the transmitter is disabled will not be transmitted.

SRA[1] — Channel A FIFO Full (FFULLA) — This bit is set when a character is transferred from the receive shift register to the receive FIFO and the transfer causes the FIFO to become full, i.e., all three FIFO positions are occupied. It is reset when the CPU reads the RHR. If a character is waiting in the receive shift register because the FIFO is full, FFULL will not be reset when the CPU reads the RHR.

SRA[0] — Channel A Receiver Ready (RxRDYA) — This bit indicates that a character has been received and is waiting in the FIFO to be read by the CPU. It is set when the character is transferred from the receive shift register to the FIFO and reset when the CPU reads the RHR, if after this read there are no more characters still in the FIFO.

SRB — Channel B Status Register

The bit definitions for this register are identical to the bit definitions for SRA, except that all status applies to the channel B receiver and transmitter and the corresponding inputs and outputs.

OPCR — Output Port Configuration Register

OPCR[7] — OP7 Output Select — This bit programs the OP7 output to provide one of the following:

- The complement of OPR[7]
- The channel B transmitter interrupt output, which is the complement of TxRDYB. When in this mode OP7 acts as an open collector output. Note that this output is not masked by the contents of the IMR.

OPCR[6] — OP6 Output Select — This bit programs the OP6 output to provide one of the following:

- The complement of OPR[6]
- The channel A transmitter interrupt output, which is the complement of TxRDYA. When in this mode OP6 acts as an open collector output. Note that this output is not masked by the contents of the IMR.

OPCR[5] — OP5 Output Select — This bit programs the OP5 output to provide one of the following:

- The complement of OPR[5]
- The channel B receiver interrupt output, which is the complement of ISR[5]. When in this mode OP5 acts as an open collector output. Note that this output is not masked by the contents of the IMR.

OPCR[4] — OP4 Output Select — This bit programs the OP4 output to provide one of the following:

- The complement of OPR[4]
- The channel A receiver interrupt output, which is the complement of ISR[1]. When in this mode OP4 acts as an open collector output. Note that this output is not masked by the contents of the IMR.

OPCR[3:2] — OP3 Output Select — This field programs the OP3 output to provide one of the following:

- The complement of OPR[3]
- The counter/timer output, in which case OP3 acts as an open collector output. In the timer mode, this output is a square wave at the programmed frequency. In the counter mode, the output remains high until terminal count is reached, at which time it goes low. The output returns to the high state when the counter is stopped by a stop counter command. Note that this output is not masked by the contents of the IMR.
- The 1X clock for the channel B transmitter, which is the clock that shifts the transmitted data. If data is not being transmitted, a free running 1X clock is output.
- The 1X clock for the channel B receiver, which is the clock that samples the received data. If data is not being received, a free running 1X clock is output.

OPCR[1:0] — OP2 Output Select — This field programs the OP2 output to provide one of the following:

- The complement of OPR[2]
- The 16X clock for the channel A transmitter. This is the clock selected by CSRA[3:0], and will be a 1X clock if CSRA[3:0] = 1111.
- The 1X clock for the channel A transmitter, which is the clock that shifts the transmitted data. If data is not being transmitted, a free running 1X clock is output.
- The 1X clock for the channel A receiver, which is the clock that samples the received data. If data is not being received, a free running 1X clock is output.

Preliminary

ACR — Auxiliary Control Register

ACR[7] — Baud Rate Generator Set Select — This bit selects one of two sets of baud rates to be generated by the BRG:

Set 1: 50, 110, 134.5, 200, 300, 600, 1.05K, 1.2K, 2.4K, 4.8K, 7.2K, 9.6K, and 38.4K baud.

Set 2: 75, 110, 134.5, 150, 300, 600, 1.2K, 1.8K, 2.0K, 2.4K, 4.8K, 9.6K, and 19.2K baud.

The selected set of rates is available for use by the channel A and B receivers and transmitters as described in CSRA and CSRB. Baud rate generator characteristics are given in table 3.

ACR[6:4]—Counter/Timer Mode and Clock Source Select — This field selects the operating mode of the counter/timer and its clock source as shown in table 4.

ACR[3:0] — IP3, IP2, IP1, IP0 Change of State Interrupt Enable — This field selects which bits of the Input Port Change register (IPCR) cause the input change bit in the interrupt status register (ISR[7]) to be set. If a bit is in the 'on' state, the setting of the corresponding bit in the IPCR will also result in the setting of ISR[7], which results in the generation of an interrupt output if IMR[7]= 1. If a bit is in the 'off' state, the setting of that bit in the IPCR has no effect on ISR[7].

IPCR — Input Port Change Register

IPCR[7:4] — IP3, IP2, IP1, IP0 Change of State — These bits are set when a change of state, as defined in the Input Port section of this data sheet, occurs at the respective input pins. They are cleared when the IPCR is read by the CPU. A read of the IPCR also clears ISR[7], the input change bit in the interrupt status register.

The setting of these bits can be programmed to generate an interrupt to the CPU.

IPCR[3:0] — IP3, IP2, IP1, IP0 Current State — These bits provide the current state of the respective inputs. The information is unlatched and reflects the state of the input pins at the time the IPCR is read.

ISR — Interrupt Status Register

This register provides the status of all potential interrupt sources. The contents of this register are masked by the interrupt mask register (IMR). If a bit in the ISR is a '1' and the corresponding bit in the IMR is also a '1', the INTRN output will be asserted. If the corresponding bit in the IMR is a zero, the state of the bit in the ISR has no effect on the INTRN output. Note that the IMR does not mask the reading of the ISR — the true status will be provided regardless of the contents of the IMR. The contents of this register are initialized to 00_{16} when the DUART is reset.

ISR[7] — Input Port Change Status — This bit is a '1' when a change of state has occurred at the IP0, IP1, IP2, or IP3 inputs and that event has been selected to cause an interrupt by the programming of ACR[3:0]. The bit is cleared when the CPU reads the IPCR.

ISR[6] — Channel B Change in Break — This bit, when set, indicates that the channel B receiver has detected the beginning or the end of a received break. It is reset when the CPU issues a channel B 'reset break change interrupt' command.

ISR[5] — Channel B Receiver Ready or FIFO Full — The function of this bit is programmed by MR1B[6]. If programmed as receiver ready, it indicates that a character has been received in channel B and is waiting in the FIFO to be read by the CPU. It is set when the character is transferred from the receive shift register to the FIFO and reset when the CPU reads the RHR. If after this read there are more characters still in the FIFO the bit will be set again after the FIFO is 'popped'. If programmed as FIFO full, it is set when a character is transferred from the receive holding register to the receive FIFO and the transfer causes the channel B FIFO to become full, i.e., all three FIFO positions are occupied. It is reset when the CPU reads the RHR. If a character is waiting in the receive shift register because the FIFO is full, the bit will be set again when the waiting character is loaded into the FIFO.

Table 3 BAUD RATE GENERATOR CHARACTERISTICS CRYSTAL OR CLOCK = 3.6864MHz

NOMINAL RATE (BAUD)	ACTUAL 16X CLOCK (KHz)	ERROR (PERCENT)
50	0.8	0
75	1.2	0
110	1.759	-0.069
134.5	2.153	0.059
150	2.4	0
200	3.2	0
300	4.8	0
600	9.6	0
1050	16.756	-0.260
1200	19.2	0
1800	28.8	0
2000	32.056	0.175
2400	38.4	0
4800	76.8	0
7200	115.2	0
9600	153.6	0
19.2K	307.2	0
38.4K	614.4	0

NOTE
Duty cycle of 16X clock is 50% ± 1%.

Table 4 ACR [6:4] FIELD DEFINITION

ACR[6:4]	MODE	CLOCK SOURCE
0 0 0	Counter	External (IP2)[1]
0 0 1	Counter	TXCA — 1X clock of channel A transmitter
0 1 0	Counter	TXCB — 1X clock of channel B transmitter
0 1 1	Counter	Crystal or external clock (X1/CLK) divided by 16
1 0 0	Timer	External (IP2)[1]
1 0 1	Timer	External (IP2) divided by 16[1]
1 1 0	Timer	Crystal or external clock (X1/CLK)
1 1 1	Timer	Crystal or external clock (X1/CLK) divided by 16

[1]In these modes, the channel B receiver clock should normally be generated from the baud rate generator.

Preliminary

ISR[4] — Channel B Transmitter Ready — This bit is a duplicate of TxRDYB (SRB[2]).

ISR[3] — Counter Ready — In the counter mode, this bit is set when the counter reaches terminal count and is reset when the counter is stopped by a stop counter command.

In the timer mode, this bit is set once each cycle of the generated square wave (every other time that the counter/timer reaches zero count). The bit is reset by a stop counter command. The command, however, does not stop the counter/timer.

ISR[2] — Channel A Change in Break — This bit, when set, indicates that the channel A receiver has detected the beginning or the end of a received break. It is reset when the CPU issues a channel A 'reset break change interrupt' command.

ISR[1] — Channel A Receiver Ready or FIFO Full — The function of this bit is programmed by MR1A[6]. If programmed as receiver ready, it indicates that a character has been received in channel A and is waiting in the FIFO to be read by the CPU. It is set when the character is transferred from the receive shift register to the FIFO and reset when the CPU reads the RHR. If after this read there are more characters still in the FIFO the bit will be set again after the FIFO is 'popped'. If programmed as FIFO full, it is set when a character is transferred from the receive holding register to the receive FIFO and the transfer causes the channel A FIFO to become full, i.e., all three FIFO positions are occupied. It is reset when the CPU reads the RHR. If a character is waiting in the receive shift register because the FIFO is full, the bit will be set again when the waiting character is loaded into the FIFO.

ISR[0] — Channel A Transmitter Ready — This bit is a duplicate of TxRDYA (SRA[2]).

IMR — Interrupt Mask Register

The programming of this register selects which bits in the ISR cause an interrupt output. If a bit in the ISR is a '1' and the corresponding bit in the IMR is also a '1', the INTRN output will be asserted. If the corresponding bit in the IMR is a zero, the state of the bit in the ISR has no effect on the INTRN output. Note that the IMR does not mask the programmable interrupt outputs OP3-OP7 or the reading of the ISR.

CTUR and CTLR — Counter/Timer Registers

The CTUR and CTLR hold the eight MSB's and eight LSB's respectively of the value to be used by the counter/timer in either the counter or timer modes of operation. The minimum value which may be loaded into the CTUR/CTLR registers is 0002_{16}. Note that these registers are write-only and cannot be read by the CPU.

In the timer (programmable divider) mode, the C/T generates a square wave with a period of twice the value (in clock periods) of the CTUR and CTLR. If the value in CTUR or CTLR is changed, the current half-period will not be affected, but subsequent half periods will be. In this mode the C/T runs continuously. Receipt of a start counter command (read with A3-A0 = 1110) causes the counter to terminate the current timing cycle and to begin a new cycle using the values in CTUR and CTLR. The counter ready status bit (ISR[3]) is set once each cycle of the square wave. The bit is reset by a stop counter command (read with A3-A0 = 1111). The command, however, does not stop the C/T. The generated square wave is output on OP3 if it is programmed to be the C/T output.

In the counter mode, the C/T counts down the number of pulses loaded into CTUR and CTLR by the CPU. Counting begins upon receipt of a start counter command. Upon reaching terminal count (0000_{16}), the counter ready interrupt bit (ISR[3]) is set. The counter continues counting past the terminal count until stopped by the CPU. If OP3 is programmed to be the output of the C/T, the output remains high until terminal count is reached, at which time it goes low. The output returns to the high state and ISR[3] is cleared when the counter is stopped by a stop counter command. The CPU may change the values of CTUR and CTLR at any time, but the new count becomes effective only on the next start counter command. If new values have not been loaded, the previous count values are preserved and used for the next count cycle.

In the counter mode, the current value of the upper and lower 8 bits of the counter (CTU, CTL) may be read by the CPU. It is recommended that the counter be stopped when reading to prevent potential problems which may occur if a carry from the lower 8-bits to the upper 8-bits occurs between the times that both halves of the counter are read. However, note that a subsequent start counter command will cause the counter to begin a new count cycle using the values in CTUR and CTLR.

IVR — Interrupt Vector Register

This register contains the interrupt vector. The register is initialized to H'0F' by RESET. The contents of the register are placed on the data bus when the DUART responds to a valid interrupt acknowledge cycle.

Preliminary

ABSOLUTE MAXIMUM RATINGS[1]

PARAMETER	RATING	UNIT
Operating ambient temperature[2]	0 to + 70	°C
Storage temperature	− 65 to + 150	°C
All voltages with respect to ground[3]	− 0.5 to + 6.0	V

NOTES:
1. Stresses above those listed under Absolute Maximum Ratings may cause permanent damage to the device. This is a stress rating only and functional operation of the device at these or at any other condition above those indicated in the operation section of this specification is not implied.
2. For operating at elevated temperatures, the device must be derated based on + 150°C maximum junction temperature.
3. This product includes circuitry specifically designed for the protection of its internal devices from damaging effects of excessive static charge. Nonetheless, it is suggested that conventional precautions be taken to avoid applying any voltages larger than the rated maxima.

DC ELECTRICAL CHARACTERISTICS $T_A = 0°C$ to $+ 70°C$, $V_{CC} = 5.0V \pm 5\%$[4,5,6]

PARAMETER		TEST CONDITIONS	LIMITS			UNIT
			Min	Typ	Max	
V_{IL}	Input low voltage				0.8	V
V_{IH}	Input high voltage (except X1/CLK)		2.0			V
V_{IH}	Input high voltage (X1/CLK)		4.0			V
V_{OL}	Output low voltage	$I_{OL} = 2.4mA$			0.4	V
V_{OH}	Output high voltage (except o.c. outputs)	$I_{OH} = -400\mu A$	2.4			V
I_{IL}	Input leakage current	$V_{IN} = 0$ to V_{CC}	− 10		10	μA
I_{LL}	Data bus 3-state leakage current	$V_O = 0$ to V_{CC}	− 10		10	μA
I_{OC}	Open collector output leakage current	$V_O = 0$ to V_{CC}	− 10		10	μA
I_{CC}	Power supply current				150	mA

NOTES:
4. Parameters are valid over specified temperature range.
5. All voltage measurements are referenced to ground (GND). For testing, all input signals swing between 0.4V and 2.4V with a transition time of 20ns maximum. All time measurements are referenced at input voltages of 0.8V and 2.0V and output voltages of 0.8V and 2.0V as appropriate.
6. Typical values are at + 25°C, typical supply voltages, and typical processing parameters.

Preliminary

AC ELECTRICAL CHARACTERISTICS $T_A = 0°C$ to $+70°C$, $V_{CC} = 5.0V \pm 5\%$[4,5,6,7]

PARAMETER		TENTATIVE LIMITS			UNIT
		Min	Typ	Max	
Reset Timing (figure 1)					
t_{RES}	RESETN pulse width	1.0			μs
Bus Timing (figures 2, 3, 4)					
t_{AS}	A1–A4 setup time to CSN low	10			ns
t_{AH}	A1–A4 hold time from CSN low	0			ns
t_{RWS}	RWN setup time to CSN low	0			ns
t_{RWH}	RWN holdup time to CSN high	0			ns
t_{CSW}[8]	CSN high pulse width	160			ns
t_{CSD}[9]	CSN or IACKN high from DTACKN low	20			ns
t_{DD}	Data valid from CSN or IACKN low			175	ns
t_{DF}	Data bus floating from CSN or IACKN high			100	ns
t_{DS}	Data setup time to CLK high	100			ns
t_{DH}	Data hold time from CSN high	0			ns
t_{DAL}	DTACKN low from read data valid	0			ns
t_{DCR}	DTACKN low (read cycle) from CLK high			125	ns
t_{DCW}	DTACKN low (write cycle) from CLK high			125	ns
t_{DAH}	DTACKN high from CSN or IACKN high			100	ns
t_{DAT}	DTACKN high impedance from CSN or IACKN high			125	ns
t_{CSC}[10]	CSN or IACKN setup time to clock high	90			ns
Port Timing (figure 5)					
t_{PS}	Port input setup time to RDN low	0			ns
t_{PH}	Port input hold time from RDN high	0			ns
t_{PD}	Port output valid from WRN high			400	ns
Interrupt Reset Timing (figure 6)					
t_{IR}	INTRN, or OP3–OP7 when used as interrupts, high from:				
	Read RHR (RxRDY/FFULL interrupt)			300	ns
	Write THR (TxRDY interrupt)			300	ns
	Reset command (delta break interrupt)			300	ns
	Stop C/T command (counter interrupt)			300	ns
	Read IPCR (input port change interrupt)			300	ns
	Write IMR (clear of interrupt mask bit)			300	ns
Clock Timing (figure 7)					
t_{CLK}	X1/CLK high or low time	100			ns
f_{CLK}	X1/CLK frequency	2.0	3.6864	4.0	MHz
t_{CTC}	CTCLK high or low time	100			ns
f_{CTC}	CTCLK frequency	0		4.0	MHz
t_{RX}	RXC high or low time	220			ns
f_{RX}	RXC frequency (16X)	0		2.0	MHz
	(1X)	0		1.0	MHz
t_{TX}	TXC high or low time	220			ns
f_{TX}	TXC frequency (16X)	0		2.0	MHz
	(1X)	0		1.0	MHz
Transmitter Timing (figure 8)					
t_{TXD}	TXD output delay from TXC low			350	ns
t_{TCS}	TXC output skew from TXD output data			150	ns
Receiver Timing (figure 9)					
t_{RXS}	RXD data setup time to RXC high	240			ns
t_{RXH}	RXD data hold time from RXC high	200			ns

NOTES:

4. Parameters are valid over specified temperature range.
5. All voltage measurements are referenced to ground (GND). For testing, all input signals swing between 0.4V and 2.4V with a transition time of 20ns maximum. All time measurements are referenced at input voltages of 0.8V and 2.0V and output voltages of 0.8V and 2.0V as appropriate.
6. Typical values are at +25°C, typical supply voltages, and typical processing parameters.
7. Test condition for outputs: $C_L = 150pF$, except interrupt outputs. Test condition for interrupt outputs: $C_L = 50pF$, $R_L = 2.7K$ ohm to V_{CC}.
8. This specification will impose maximum 68000 CPU CLK to 6MHz. Higher CPU CLK can be used if repeating bus reads are not performed.
9. This specification imposes a lower bound on CSN and IACKN low, guaranteeing that it will be low for at least 1 CLK period.
10. This specification is made only to insure that DTACKN is asserted with respect to the rising edge of the X1/CLK pin as shown in the timing diagram, not to guarantee operation of the part. If the setup time is violated, DTACKN may be asserted as shown, or may be asserted one clock cycle later.

Preliminary

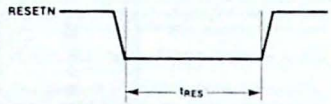

Figure 1. Reset Timing

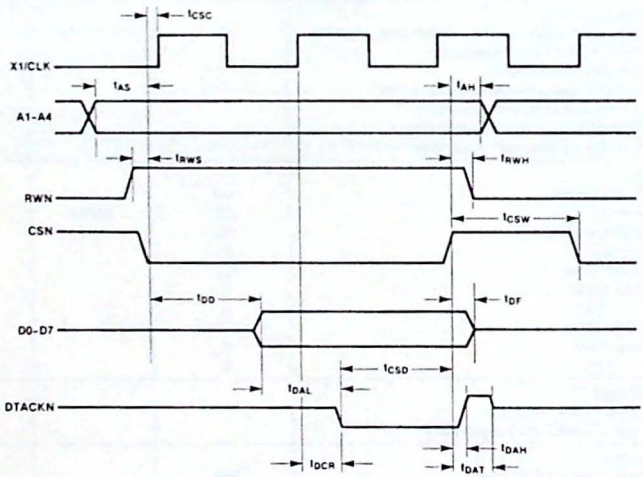

Figure 2. Bus Timing (Read Cycle)

VALVO

Preliminary

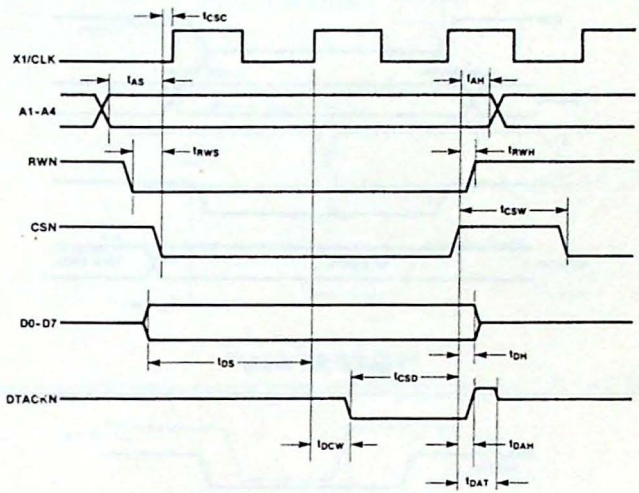

Figure 3. Bus Timing (Write Cycle)

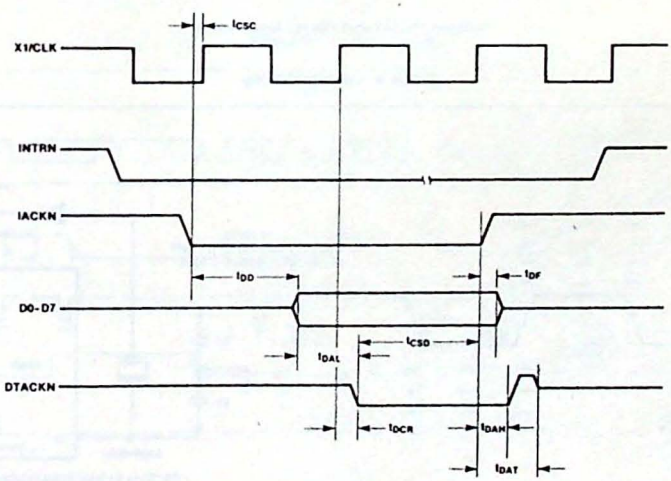

Figure 4. Interrupt Cycle Timing

Preliminary

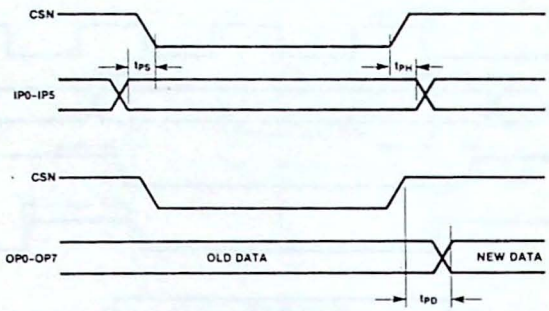

Figure 5. Port Timing

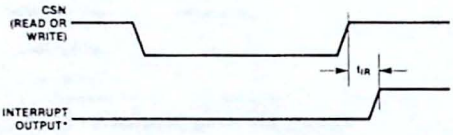

*INTRN or OP3-OP7 when used as interrupt outputs.

Figure 6. Interrupt Timing

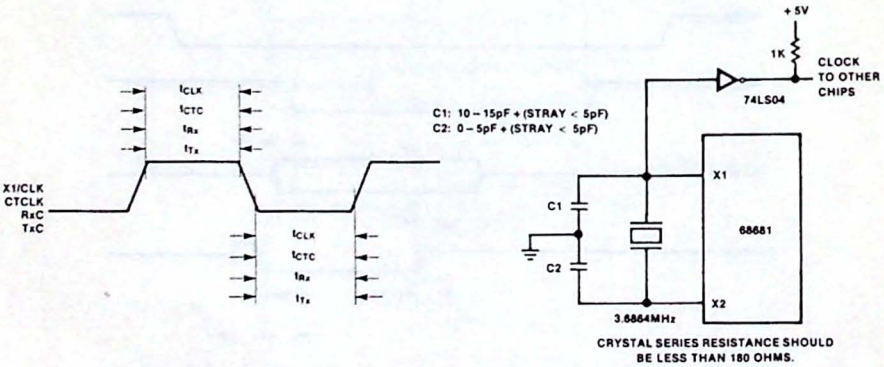

Figure 7. Clock Timing

VALVO

Preliminary

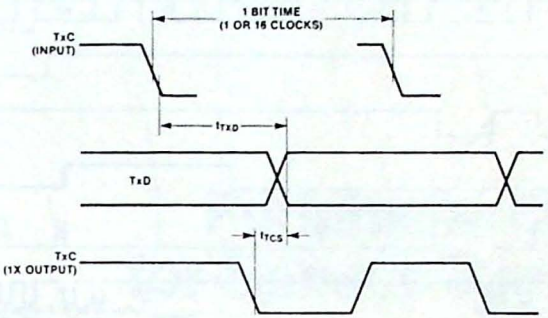

Figure 8. Transmit Timing

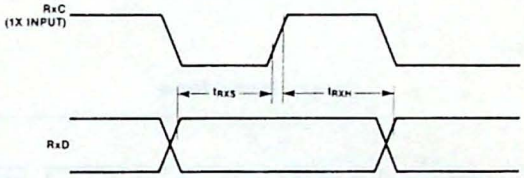

Figure 9. Receive Timing

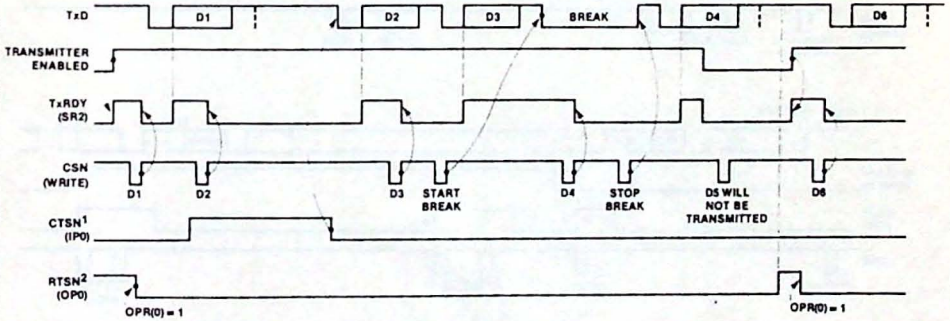

NOTES
1. TIMING SHOWN FOR MR2(4) = 1.
2. TIMING SHOWN FOR MR2(5) = 1.

Figure 10. Transmitter Timing

Preliminary

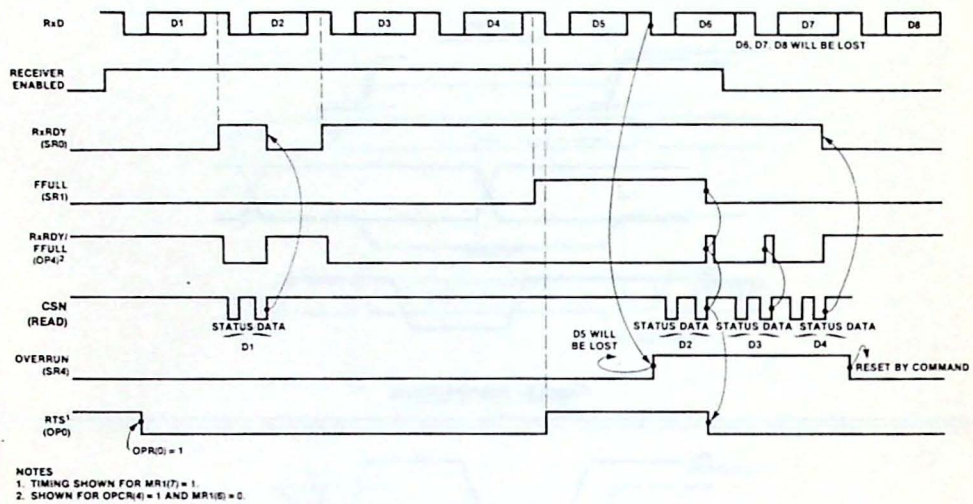

Figure 11. Receiver Timing

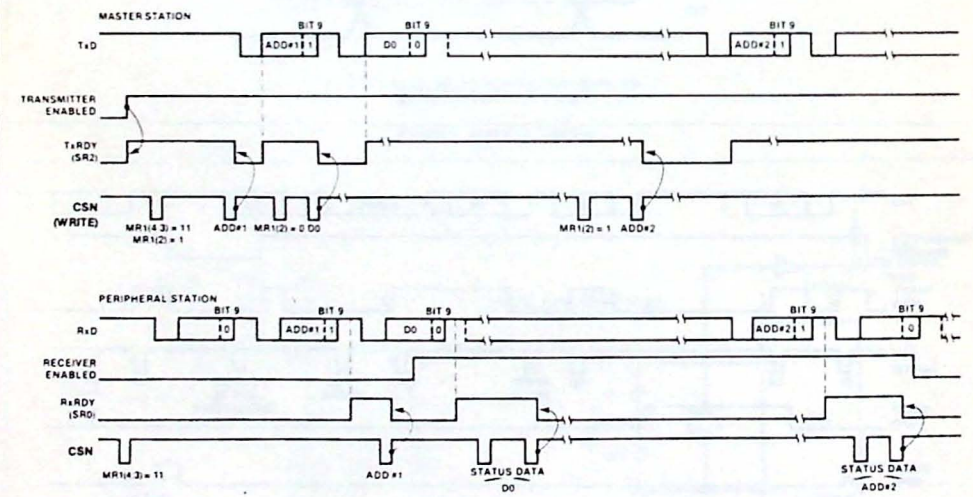

Figure 12. Wake up Mode

Peripheral Circuits for Speech Synthesis

VALVO

VOICE SYNTHESIZER MEA8000

Preliminary

DESCRIPTION

The MEA8000 is a 24-pin N MOS integrated circuit for generating good quality speech from digital code with a programmable bit rate. The circuit is primarily intended for applications in microprocessor controlled systems, where the speech code is stored separately in a Read-Only Memory. An efficient, easy-to-use speech editing and encoding system with EPROM programming capability, has been specially developed.

APPLICATIONS

- Telephony
- Automotive
- Computer response/prompt.
- Video games.
- General industrial.

FEATURES

- Microprocessor interface cability including an 8-bit data bus, an enable and a read/write input control signals.
- 32-bit data buffer holding speech frame codes.
- Digital filter of 8th order with 3 programmable formant frequencies, one fixed formant frequency, and 4 programmable formant bandwidths. 4 KHz bandwidth.
- Programmable amplitudes.
- Programmable duration of each frame: 8, 16, 32, or 64 milliseconds.
- Low data rate: average 1000 bits/sec.
- Operates from standard EPROMs/ROMs.
- Minimal external audio filter requirement.
- Crystal controlled oscillator or external (TTL) clock.
- Single +5V power supply.

PIN CONFIGURATION

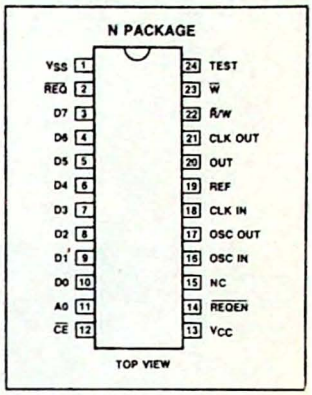

BLOCK DIAGRAM

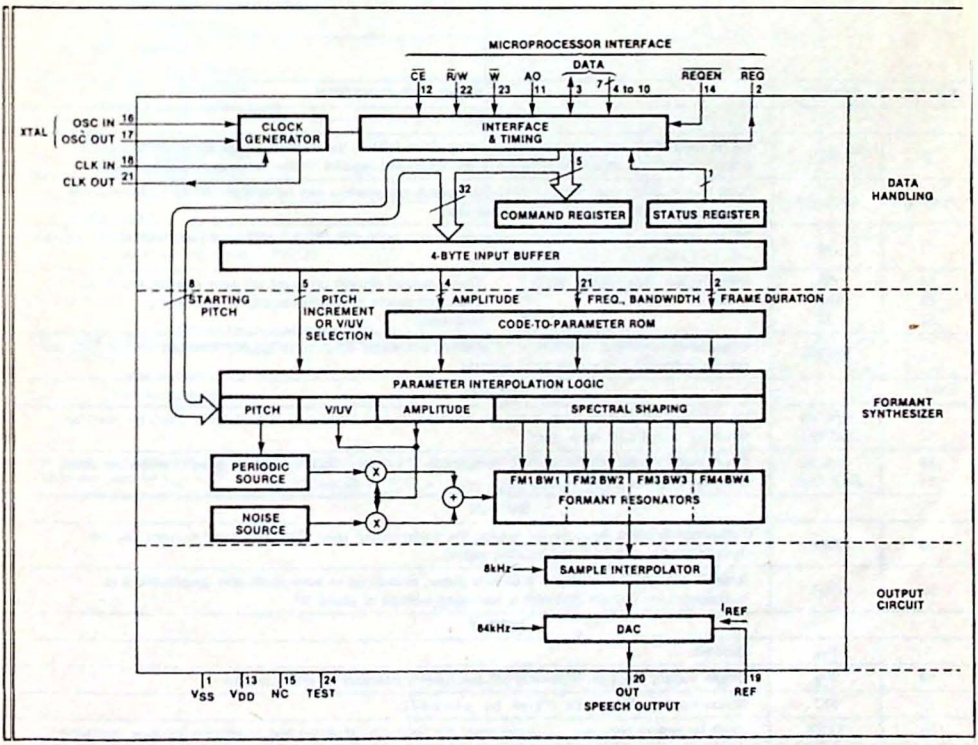

Preliminary

FUNCTIONAL PIN DESCRIPTION

N PACKAGE

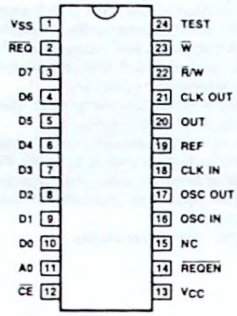

TOP VIEW

PIN NO.	SYMBOL	NAME AND FUNCTION
		CONTROL
2	$\overline{REQ}$	**DATA REQUEST** output signal (open drain) which follows the inverse of the status REQ bit, but only if enabled by either the ROE bit in the command register or the external $\overline{REQEN}$ input pin.
3 to 10	D7 to D0	**Data bus** to which command or encoded speech parameters can be written. D7 is a bidirectional line through which the status bit can be read.
11	A0	**Data/control** input. Discriminates between speech code input buffer (A0 = '0') and command register (A0 = '1') during a 'write' operation.
12 22 23	$\overline{CE}$ R/W $\overline{W}$	**Chip enable, Read/Write, Write** These control signals provides an easy interface to most microprocessors or microcomputers (see timing diagrams).
14	$\overline{REQEN}$	**Request enable** input. $\overline{REQEN}$ = '0' enables the status REQ bit to appear inverted on the $\overline{REQ}$ output, independent of the command register.
		TIMING
16 17	OSC IN OSC OUT	Connections for internal clock oscillator. Nominal crystal frequency is 4.00 MHz. OSC IN must be tied to ground if CLK IN is used.
18 21	CLK IN CLK OUT	**Clock input** for external clock, TTL compatible, 3.84 MHz. Must be tied to ground when not used. A buffered output of the internal clock cycle (= CLK IN divided by 3).
		OUTPUT
19	REF	**Reference Current** Input pin for biasing the audio output level. This reference current can be derived from a resistor to the positive supply.
20	OUT	**Speech output.** This output is a 64 kHz pulse, modulated in both width and amplitude. It is configured as a current sink with a saturating voltage of about 3V.
		SUPPLY
1	V_{SS}	**Ground.**
13	V_{CC}	**Single supply voltage.** Nominally 5V, but battery operation is also possible.
15	NC	No connection. Must be tied to ground.
24	TEST	Used for testing purposes. Changes other pin functions. Must be tied to ground for user operation.

Preliminary

ABSOLUTE MAXIMUM RATING

SYMBOL AND PARAMETER		RATING	UNIT
V_{CC}	Supply voltage	−0.5 to +7	V
V_I	Voltage on any pin with respect to V_{SS}	−0.5 to +7	V
$V_{\overline{REQ}}$, V_{OUT}	Output voltage on pins 2 and 20	15	V
T_{STG}	Storage temperature range	−20 to +125	°C
T_A	Operating ambient temperature range	0 to +70	°C

DC ELECTRICAL CHARACTERISTICS T_A = 25°C; V_{CC} = 5V, unless otherwise stated. All voltages referenced to V_{SS}

SYMBOL AND PARAMETER		TEST CONDITION	MEA8000			UNIT
			Min	Typ	Max	
V_{CC}	Supply voltage (note 1)		4.5	5.0	5.5	V
I_{CC}	Supply current	(No audio load)		30	50	mA
	D0 to D7, A0, $\overline{CE}$, $\overline{W}$, $\overline{R}$/W, $\overline{REQEN}$, CLK IN:					
V_{IH}	Input HIGH voltage		2.0		V_{CC}	V
V_{IL}	Input LOW voltage		−0.5		0.8	V
I_{IR}	Input Leakage current (note 2)				10	μA
C_I	Input Capacitance				7	pF
	D7 (I/O) , CLK OUT:					
V_{OH}	Output HIGH voltage	I_{OH} = −100 μA	2.4			V
V_{OL}	Output LOW voltage	I_{OL} = 1.6 mA			0.4	V
C_L	Output Load capacitance				50	pF
	$\overline{REQ}$:					
V_{OH}	Output HIGH voltage	Open drain			13.2	V
V_{OL}	Output LOW voltage	I_{OL} = 1.6 mA			0.4	V
C_L	Output Load capacitance				50	pF
	Audio output					
I_{REF}	Reference current (note 8) - Pin 19				0.3	mA
I_{OUT}	Output current (peak) - Pin 20					
		I_{REF} = 0 mA		100		μA
		I_{REF} = 0.1 mA		1.7		mA
		I_{REF} = 0.3 mA		5		mA
V_{OUT}	V_{OUT} (pin 20) for linear operation (note 3)	I_{REF} = 0.1 mA	2.5		13.2	V
	Oscillator					
f_{XTAL}	Crystal frequency	Internal		4.00	4.00	MHz
f_{CLK}	Clock frequency	External		4.00	4.00	MHz

NOTES
1. The circuit will continue to operate from a supply of up to 6.5V, but without necessarily meeting the specification.
2. This is also valid for V_{CC} = 0V.
3. This permits connection of the output load to a supply higher than that supplying the synthesizer.

Preliminary

AC ELECTRICAL CHARACTERISTICS (note 4) (Figure 4 and 5)

SYMBOL AND PARAMETER		TEST CONDITION	MEA8000			UNIT
			Min	Typ	Max	
t_{WR}	Write enable pulse width.		200			ns
t_{AS}	Address set-up time.		30			ns
t_{AH}	Address hold time.		30			ns
t_{DS}	Data set-up time for write operation.		150			ns
t_{DH}	Data hold time for write operation.		30			ns
t_{RH}	Request hold time (note 5)				350	ns
t_{RN}	Request next (note 6)	Clock frequency = 4.00 MHz			3	µs
t_{RD}	Read enable time.		200			ns
t_{DD}	Data delay for read operation (note 7)				150	ns
t_{DF}	Data floating for read operation (note 7)				150	ns
t_{RV}	Request valid before a write operation.		0			ns
t_{ROE}	Request output enable response.				750	ns
t_{CS}	Control set-up time.				20	ns
t_{CH}	Control hold time.				20	ns

NOTES

4. Timing reference level is 1.5V.
5. An external pull up resistor is required, as this is an open drain output. The time (t_{RH}) to reach 2.0V is specified at a load to 5V of 3.3 kΩ and 50 pF.
6. Between two data write operations of one speech frame.
7. Levels greater than 2.0V for a '1' or less than 0.8V for a '0' are reached with a load of one TTL input and 50 pF.
8. Typical voltage level at the REF pin is 2.5V.

VOICE SYNTHESIZER MEA8000

Preliminary

PRINCIPLE OF OPERATION

The MEA8000 voice synthesizer implements the vocal tract modeling technique of voice synthesis (also known as formant synthesis). This technique results in producing good quality speech with the lowest possible bit rates; this will in turn mean small memory size requirements.

Figure 1 shows an electronic model of the human vocal tract. A mixture of a periodic signal, representing the pitch of the original speech, and an aperiodic signal, representing the unvoiced sound in the speech, is fed via an amplifier stage to a variable filter comprising of four resonators. The amplifier controls the amplitude of the synthesized sound while the resonators model the sound in accordance with the formants in the original speech. Each resonator is controlled by two parameters, one for the resonant frequency and one for the bandwidth. The information required to control such a synthesizer system is defined by the pitch frequency, the amplitude values, the voiced/unvoiced source selection and the resonator settings. By periodic updating of this control information one can obtain a good replica of the original speech.

Operation

The MEA8000 generates speech output by suitable filtering of a relatively low frequency sawtooth waveform for voiced sounds or for random noise for unvoiced sounds.

Speech encoded parameters, controlling the on-chip periodic source and digital filter, are transmitted on the 8-bit data bus from external memory to the MEA8000 under the control of an external microprocessor or microcomputer.

At first, a byte containing the starting pitch code must be transmitted to the MEA8000. This byte goes directly to the pitch generating circuitry via the input interface logic. Subsequent pitch frequencies are then specified using the pitch increment parameter; this method of encoding pitch contributes to the low bit rate requirements.

After receiving the starting pitch code, the codes of each speech frame (32 bits), when received, are shifted into a four-byte input buffer before being translated into control parameters by the code-to-parameter ROM (See Block Diagram). The parameter interpolation logic calculates the difference, and interpolates linearly between consecutive parameters to smooth the parameter transients. The interpolation interval is decoded using the two Frame Duration (FD) bits in each speech frame. Because the FD bits specify a frame duration of 8, 16, 32 or 64ms, the resulting average bit rate is about 1000 bits/sec.

Since the on-chip output sampling rate is 64KHz, the need for an external analog output filter is greatly reduced.

Modes of Operation

1. STOP mode: characterized by a silent output and the status REQ bit set to '1'. This mode is entered from power up or by STOP command. The mode is entered automatically if at the end of an active speech frame the next four parameter bytes are not yet received while the CONT bit in the command register is a '0'. In the latter case the final speech frame will be repeated once but with a decaying amplitude and the same pitch.

2. ACTIVE mode: a speech sample is being produced.

3. CONTINUOUS mode: entered if an active speech frame is finished and new data is not supplied in time while the CONT bit in the command register is a '1'. The synthesizer wi repeat the last speech frame indefinitely ur all four new data bytes are received, a ST command has been issued or the CONT c mand bit has been reset.

Control Signals

With the three control signals $\overline{CE}$, $\overline{W}$ and $\overline{R}$/W, provided on 3 external pins, the MEA8000 voice synthesizer chip is made compatible with most popular microprocessors and microcomputers. Please refer to the timing diagrams for timing requirements.

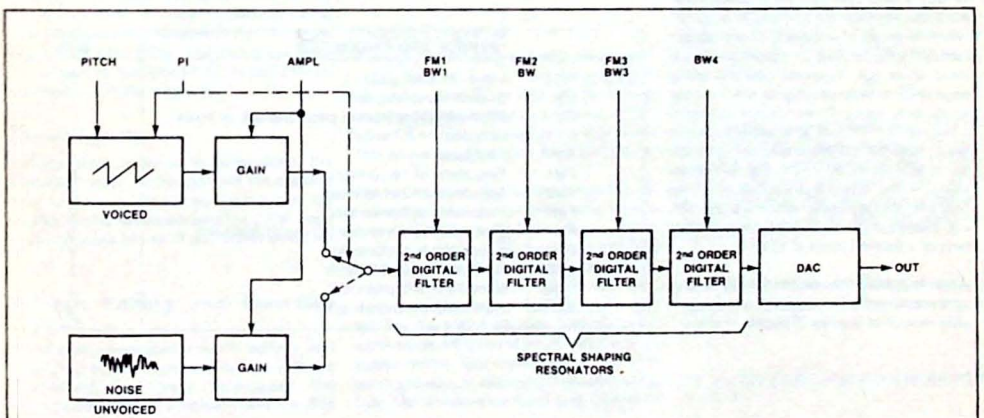

Figure 1. Electronic Model of Human Vocal Tract.

Preliminary

Addressing the MEA8000

The MEA8000 voice synthesizer chip is addressed as a peripheral device to the host microprocessor or microcomputer. The three control signals, $\overline{CE}$, $\overline{W}$, and $\overline{R}$/W along with the A0 address input, allow the MEA8000 to be addressed as an I/O device or as a memory device in a memory-mapped I/O system.

The input buffer and the command register are write-only while the status register is a read-only, as depicted in the following table:

$\overline{CE}$	$\overline{W}$	$\overline{R}$/W	A0	OPERATION
0	0	1	0	Write Data
0	0	1	1	Write Command Register
0	X	0	X	Read Status Register
0	1	1	X	Three-State Data Bus
1	X	X	X	Three-State Data Bus

Status Register

The MEA8000 status register consists of a single bit: REQ. The status REQ bit appears on bit 7 of the data bus, D7, when reading the status register. The $\overline{REQ}$ output carries the inverse polarity of the status REQ bit. When the status REQ bit is a "0", the MEA8000 is busy and cannot accept any write data. The MEA8000 requests more data by setting its status REQ bit to a "1"; in this case the $\overline{REQ}$ output pin is active "0" only if this output is enabled. The $\overline{REQ}$ output is enabled either by hardware by connecting $\overline{REQEN}$ pin to ground, or by software by setting the ROE bit in the command register to a "1" while holding $\overline{REQEN}$ pin high. The MEA8000 voice synthesizer chip can then be used in an interrupt driven environment or in a polled type structure.

Speech Code Input Buffer

The MEA8000 has a 32-bit (4-byte) input buffer. This buffer holds the speech encoded parameters for one speech frame.

Starting from the STOP mode — see Modes of Operation — the first data byte received by the MEA8000 will be interpreted as a starting value for the pitch. Every four successive data bytes received thereafter are treated as a group of speech code. The coded speech frame format is shown in Figure 2.

Writing a data byte into the MEA8000 will, automatically, clear the status REQ bit to "0". Within a group of 4 bytes (i.e. one speech frame), the $\overline{REQ}$ output (if enabled) will be activated within 3µs, measured from the trailing edge of $\overline{CE}$ or $\overline{W}$ (depending on which is used as the write strobe — see Timing), indicating a request for the next byte within the same group. Note that this time is extended to a multiple of 8ms (8, 16, 32 or 64) after writing the fourth, or last, byte of a group. This allows the host microprocessor enough time to use polling, instead of interrupts, since the minimium time of a speech frame is 8ms.

When in the STOP mode, the MEA8000 voice synthesizer will commence producing sound after receipt of 5 bytes (Figure 2).

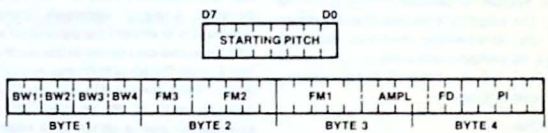

Figure 2. Format of Coded Speech Frame

SYMBOL AND PARAMETER		BITS
Starting Pitch	Initial value for pitch	8
FD	Speech frame duration	2
PI	Pitch increment (rate of pitch change) or noise selection	5
AMPL	Amplitude	4
FM1	Frequency of 1st formant	5
FM2	Frequency of 2nd formant	5
FM3	Frequency of 3rd formant	3
FM4	Frequency of 4th formant (fixed at 3500 Hz)	0
BW1	Bandwidth is 1st formant	2
BW2	Bandwidth of 2nd formant	2
BW3	Bandwidth of 3rd formant	2
BW4	Bandwidth of 4th formant	2

Preliminary

Command Register

The MEA8000 has a 5-bit command register. A command word is written into the command register by performaing a write operation with A0 input being set to "1".

The following explains the various command bits in the command register:

STOP results in an immediate reset of the synthesizer to the STOP mode. The ROE and CONT are not affected by this command.

CONT Continuous mode. This bit can be set or cleared only if the corresponding CONT enable bit is programmed as a '1'. In the continuous mode the synthesizer will not revert to the STOP mode if all four parameters are not received before the end of the current speech frame, but will repeat it indefinitely.

If CONT = '0', the last frame will be repeated once with decaying amplitude and the same pitch before the stop mode is entered.

ROE Request Output Enable. This bit can be set or cleared only if the corresponding ROE enable bit is a '1'. ROE determines whether the request in the status bit appears on the REQ pin. Note: the same can be achieved by connecting the REQEN pin (request enable) to a '0'.

After power on, the command register bits CONT and ROE will both be zero. Thus power on equals the command 00011010 = 1 A (hexadecimal).

D7	D6	D5	D4	D3	D2	D1	D0
			STOP	CONT enable	CONT	ROE enable	ROE
Not used			'0' = Invalid '1' = Stop	00 = Invalid 01 = Invalid 10 = Slow stop 11 = Continue		00 = Invalid 01 = Invalid 10 = Disable $\overline{REQ}$ output 11 = Enable $\overline{REQ}$ output	

ROM Mapping

The external ROM that stores the speech codes of an utterance or a word (called a speech file) also stores the starting pitch byte and the file header. The header comprises three bytes, two that indicate the number of bytes in the file and one that allows additional data to be encoded for each file.

Usually, more than one speech file will be stored in a ROM. An index is made by listing the 2-byte starting addresses of each file at the beginning of the ROM. The end of the index is indicated by the bytes FF FF. Figure 3 shows examples of ROM mapping.

Power Supply

During (slow) power-up or power-down, the MEA8000 voice synthesizer will not produce any spurious sound. When powering-up the device, the MEA8000 will be in the STOP mode with command bits ROE and CONT being set to "0".

Speech Editing and Encoding System

A specially designed speech editing and encoding system, targeted for use with the MEA80000, has been developed. The system consists of a Speech Adapter Box (SAB), a customized software package, and a general purpose personal computer.

The system is capable of programming the PROM's with the most efficient speech parameters. These parameters, when read by the MEA8000 voice synthesizer chip, will produce the best quality speech possible that this chip is capable of delivering.

Timing Diagrams

Read and write timing diagrams are depicted in Figures 4, 5, and 6. Note that for a read operation, either $\overline{CE}$ or $\overline{R}$/W can be used as the read strobe whereas for a write operation, either $\overline{CE}$ or $\overline{W}$ can be used as the write strobe. This allows great flexibility in system design.

Figure 7 shows the timing sequence encountered when writing speech code data into the MEA8000. In the figure, data is written on the rising edge of $\overline{CE}$. Starting in the STOP mode, the first byte to be written is the starting pitch. This is followed by 4 consecutive bytes, representing the first speech frame to be written into the MEA8000. Note that within the same frame, $\overline{REQ}$ output pin (if enabled) is activated within 3µs indicating, to the host microprocessor, its readiness to accept the next byte. After receiving the fourth byte of a speech frame, the $\overline{REQ}$ output pin will not be activated until the frame duration period (specified by the two FD bits) has elapsed. This time is equivalent to 8, 16, 32 or 64ms.

System Configurations

Figure 8 shows a minimal system configuration for a voice application system using a general purpose microprocessor or a single chip microcomputer. In the latter case, speech code parameters are stored in the on-chip microcomputer ROM.

Figure 9 depicts a speech synthesis system using the SCN8051, 8-bit single chip microcomputer. Separate external program memory and speech parameters memory is shown, using 64K ROM chips. Note that external buffers might be needed on P0 (0-7) depending on loading conditions.

Figure 10 shows a typical audio output stage configuration using the TDA1011 audio power amplifier chip.

The oscillator/clock configurations are depicted in Figure 11.

Preliminary

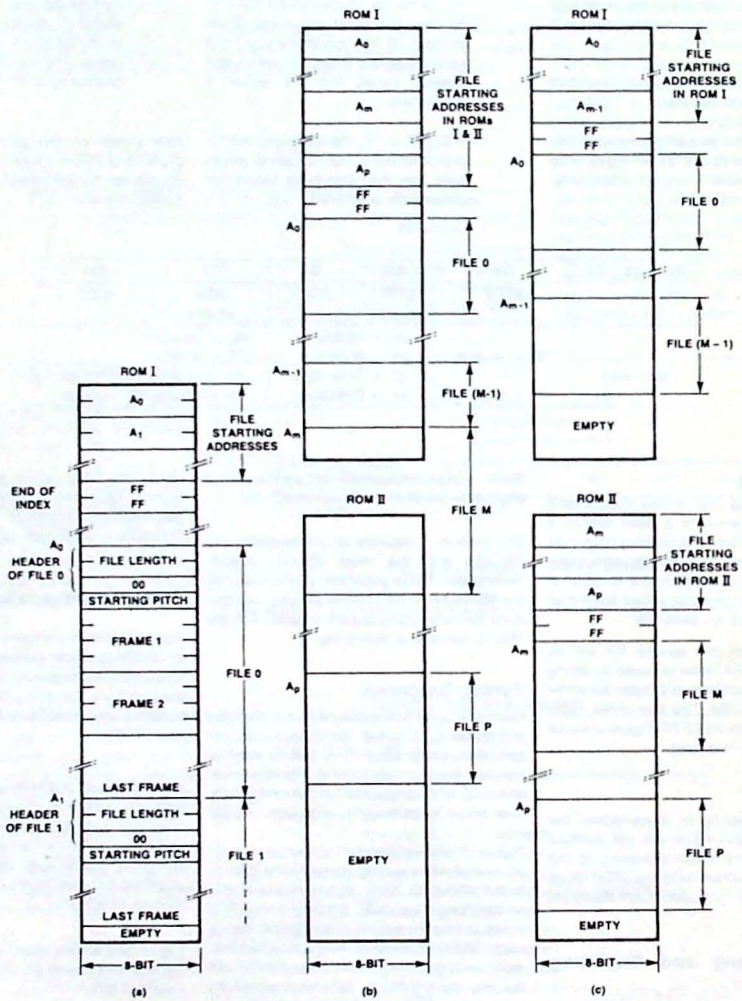

Figure 3. Examples of ROM Memory Mapping; (a) Vocabulary in One ROM, (b) and (c) Vocabulary in Two ROMs.

Preliminary

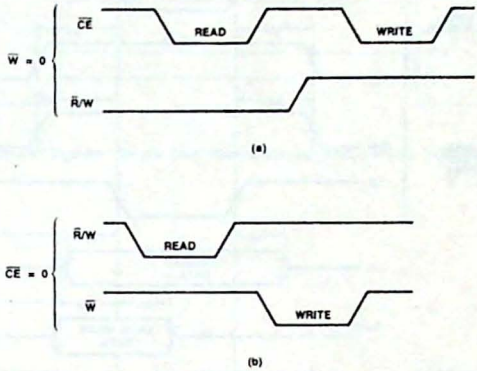

Figure 4. (a) Chip Enable (CE) Used as a Read or Write Strobe; (b) Separate Read and Write Strobes.

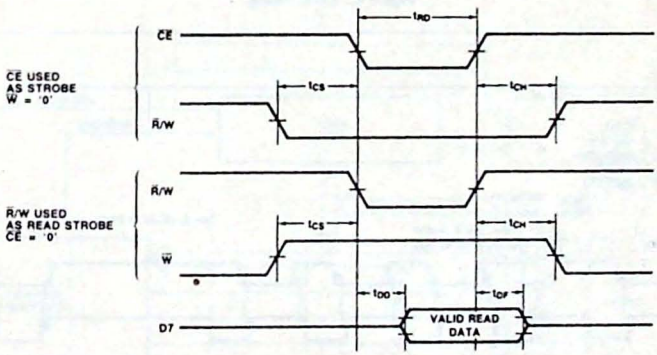

Figure 5. Read Timing

NOTES
Address input A0 is a don't care. Data bits D0 to D6 remain floating.

Preliminary

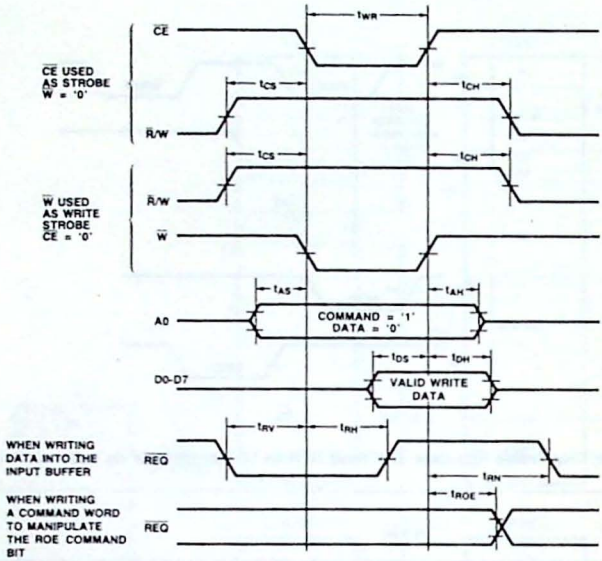

Figure 6. Write Timing

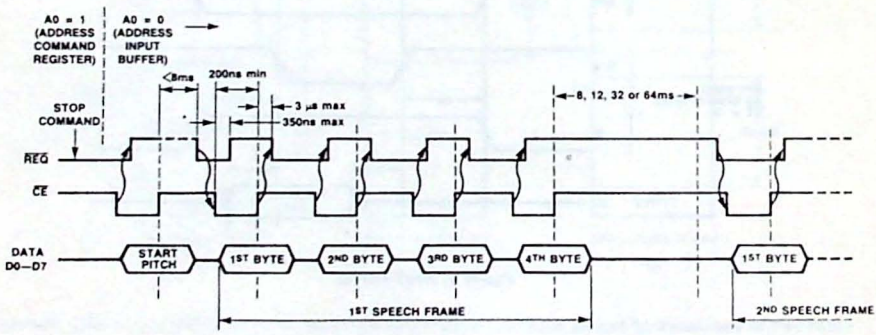

Figure 7. Speech Code Data Write Timing Sequence

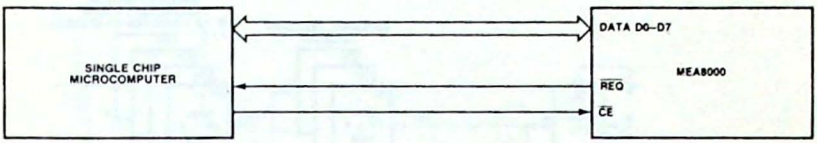

a. Minimal System: Single Chip Microcomputer With On-chip Voice ROM.

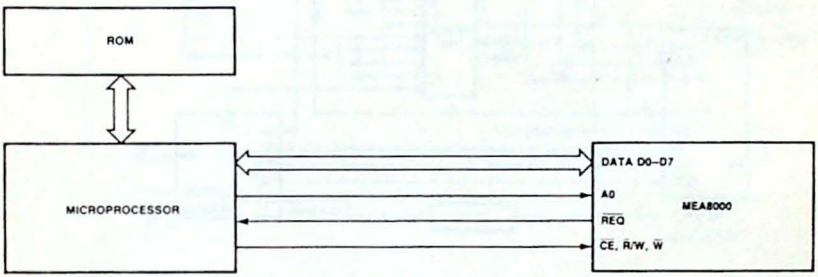

b. MEA8000 as a Microprocessor Peripheral

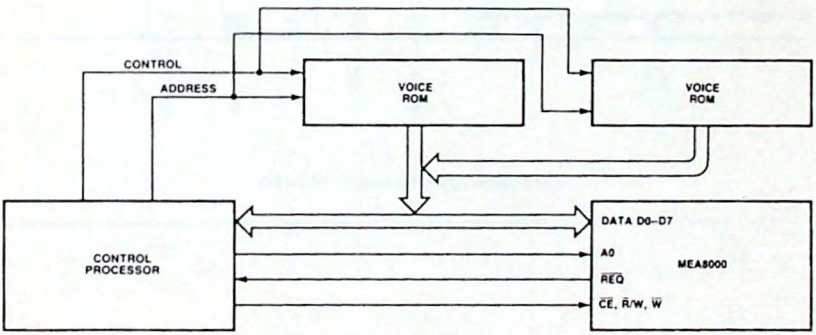

c. Applications Using Separate Voice ROMs.

Figure 8. Typical Application Configurations.

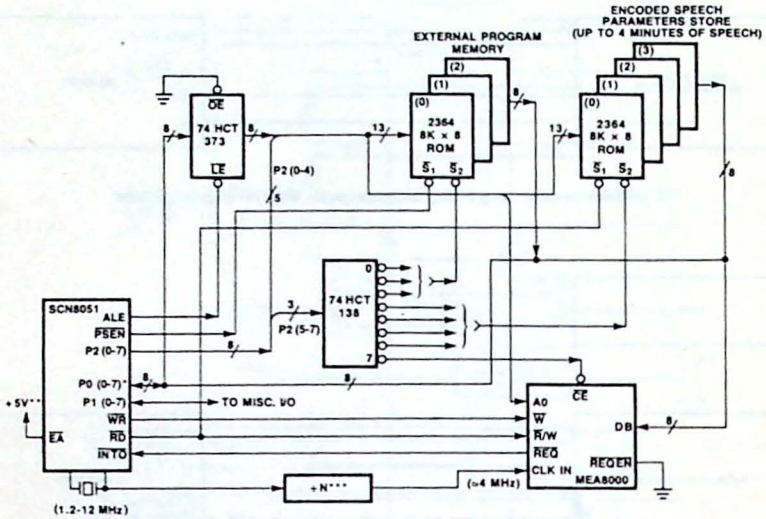

Figure 9. Speech Synthesis System Using the 8051 8-Bit Microcomputer

*External buffers might be needed.

**Connect EA to ground for the ROM less version (SCN 8031).

*** ÷N is a single F/F when XTAL frequency is around 8 MHz

Preliminary

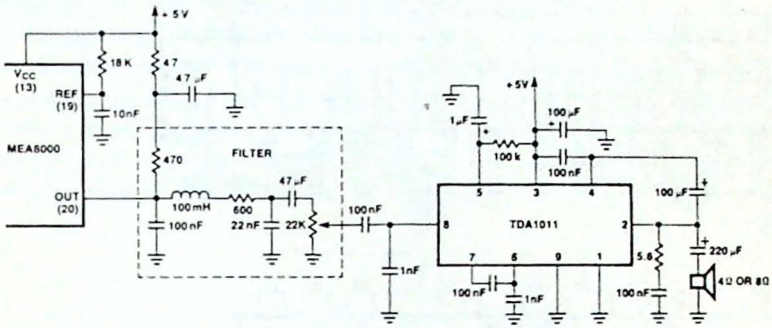

Figure 10. Audio Output Stage—Typical Configuration.

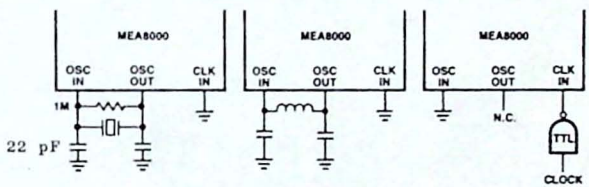

Figure 11. Oscillator/Clock Configurations

Preliminary

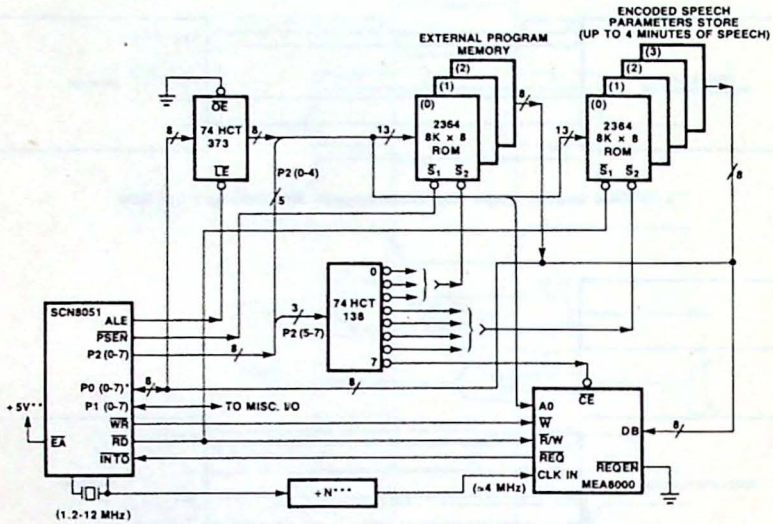

Figure 9. Speech Synthesis System Using the 8051 8-Bit Microcomputer

*External buffers might be needed.

**Connect EA to ground for the ROM less version (SCN 8031).

*** ÷N is a single F/F when XTAL frequency is around 8 MHz

Preliminary

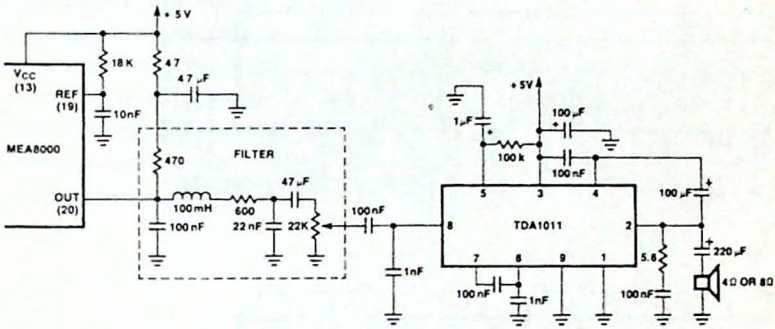

Figure 10. Audio Output Stage—Typical Configuration.

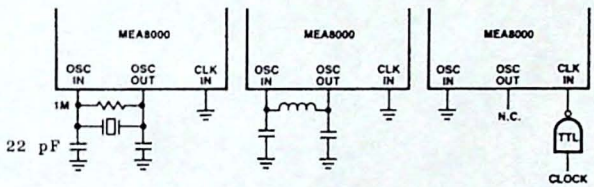

Figure 11. Oscillator/Clock Configurations

Preliminary

24-LEAD DUAL IN-LINE; PLASTIC (SOT-101A)

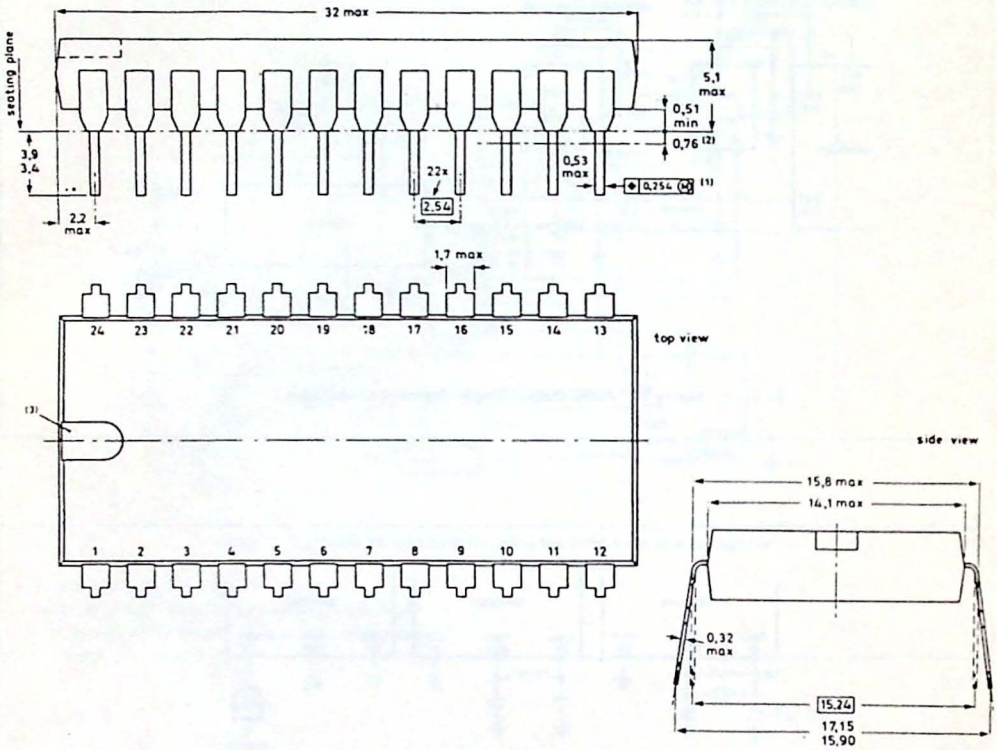

SOLDERING

1. By hand

Apply the soldering iron below the seating plane (or not more than 2 mm above it).
If its temperature is below 300 °C it must not be in contact for more than 10 seconds; if between 300 °C and 400 °C, for not more than 5 seconds.

2. By dip or wave

The maximum permissible temperature of the solder is 260 °C; this temperature must not be in contact with the joint for more than 5 seconds. The total contact time of successive solder waves must not exceed 5 seconds.
The device may be mounted up to the seating plane, but the temperature of the plastic body must not exceed the specified storage maximum. If the printed-circuit board has been pre-heated, forced cooling may be necessary immediately after soldering to keep the temperature within the permissible limit.

3. Repairing soldered joints

The same precautions and limits apply as in (1) above.

⊕ Positional accuracy.

Ⓜ Maximum Material Condition.

(1) Centre-lines of all leads are within ±0,127 mm of the nominal position shown; in the worst case, the spacing between any two leads may deviate from nominal by ±0,254 mm.

(2) Lead spacing tolerances apply from seating plane to the line indicated.

(3) Index may be horizontal as shown, or vertical.

SPRACHAUSGABE - PLATINE

OM 8000 ist eine komplette Sprachausgabe-Einheit auf einer Einfach-Europakarte für Versuchsaufbauten und Geräte in kleinen Serien.
Die Einfach-Europakarte OM 8000 enthält neben der Integrierten Schaltung MEA 8000 den Steuerprozessor MAB 8400 B, einen 0,5 W NF-Verstärker sowie das Businterface - wahlweise 8bit parallel oder I^2C-seriell. In 4 EPROMs läßt sich Sprachcode für bis zu 2 Minuten Wiedergabezeit ablegen. Die residente Software erlaubt mehrere Betriebsarten, u.a. für Satzzusammenstellungen. Zum Lieferumfang gehört ein EPROM mit Mustertexten für Inbetriebnahme und Demonstrationszwecke.

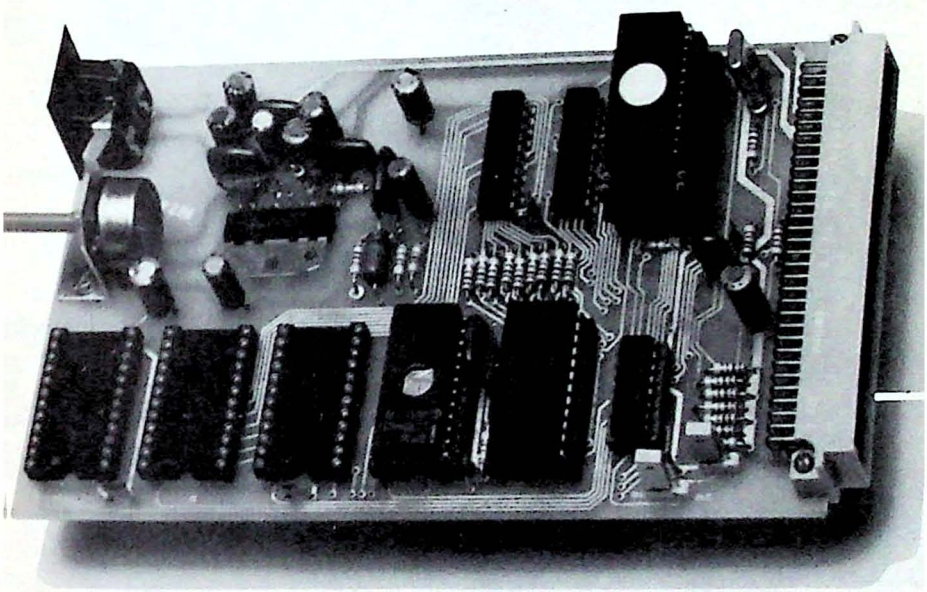

Autonomes Spracheditiersystem "Chatterbox"

SSPEECH ADAPTER BOX

DDie Audio-Eingabe-/Ausgabe-Einheit bildet zusammen mit einem Personal-Computer HHP 9816 S das autonome Spracheditiersystem Chatterbox. Damit wird jeder Anwendder des Sprachsynthesizers MEA 8000 in die Lage versetzt, selbst den für seine AApplikation benötigten Wortschatz zu bearbeiten.

DDie auf dem Sichtgerät der Chatterbox dargestellten Parameter-Kurvenverläufe mmachen das gesprochene Wort auch dem Laien anschaulich verständlich. Durch bedddienerführende Zusatzinformationen wird auch ein ungeübter Bearbeiter in weniggen Tagen in die Lage versetzt, die Klangoptimierung seines Ansagetextes sselbst durchzuführen.

OM 8010

Die OM 8010 - Steuerung erfolgt ausschließlich über die Tastatur des Rechners:

- Eingangspegel
- Ausgangslautstärke
- Abtastfrequenz (6.000 - 20.000 Hz)
- Filterbegrenzung

Audio - Eingabe:

- 12bit AD - Wandler

Audio - Ausgabe:

- 8bit DA - Wandler
- Synthesizer MEA 8000

Rechner - Interface: IEC 625

EPROM - Programmiergerät für 2716, 2732(A), 2764

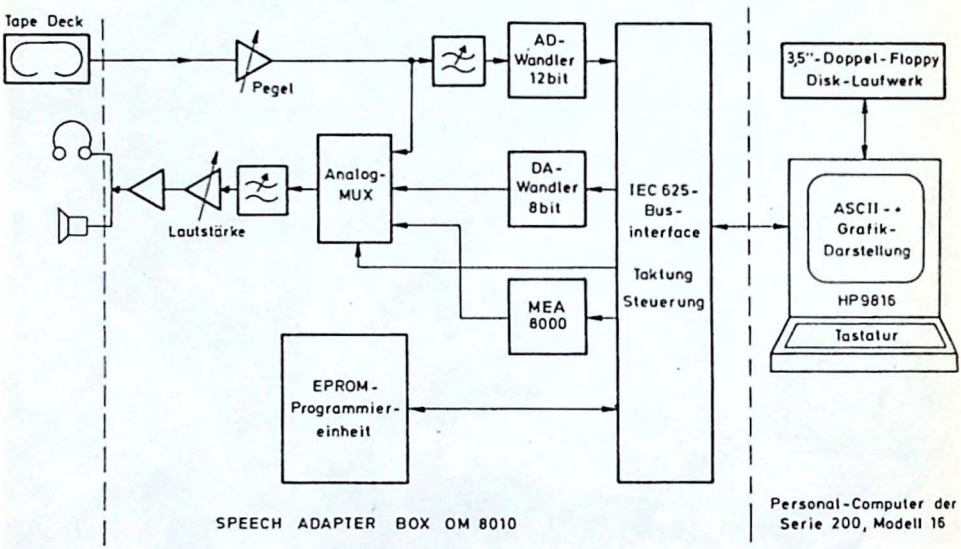

Autonomes Spracheditiersystem „Chatterbox"

This information is derived from development samples made available for evaluation. It does not necessarily imply that the device will go into regular production.

MICROPROCESSOR CONTROLLED STEREO SOUND GENERATOR FOR SOUND EFFECTS AND MUSIC SYNTHESIS

GENERAL DESCRIPTION

The SAA1099 is a monolithic integrated circuit designed for generation of stereo sound effects and music synthesis.

Features

- Six frequency generators
  - eight octaves per generator
  - 256 tones per octave
- Two noise generators
- Six noise/frequency mixers
- Twelve amplitude controllers
- Two envelope controllers
- Two 6-channel mixers/current sink analogue output stages
- TTL input compatible
- Readily interfaces to 8-bit microcontroller
- Minimal peripheral components
- Simple output filtering

Applications

- Consumer games systems
- Home computers
- Electronic organs
- Arcade games
- Toys
- Chimes/alarm clocks

QUICK REFERENCE DATA

Supply voltage (pin 18)	V_{DD}	typ.	5	V
Supply current (pin 18)	I_{DD}	typ.	55	mA
Reference current (pin 6)	I_{ref}	typ.	250	μA
Total power dissipation	P_{tot}		450	mW
Operating ambient temperature range	T_{amb}		0 to + 70	°C

PACKAGE OUTLINE

18-lead DIL; plastic (SOT-102CS).

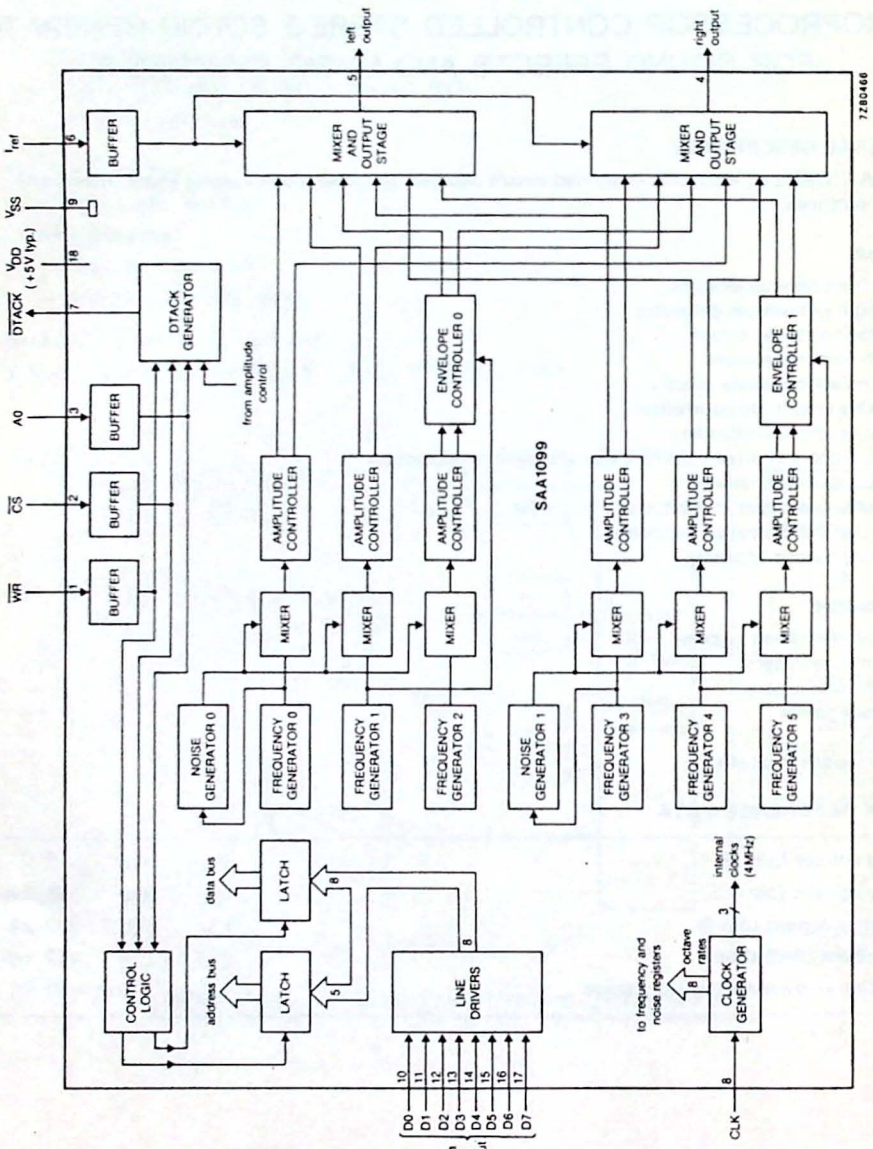

Fig. 1 Block diagram.

PINNING

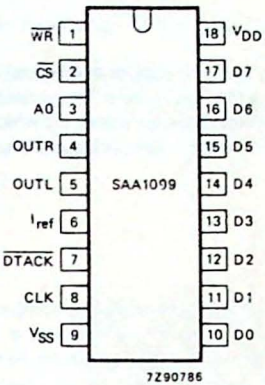

Fig. 2 Pinning diagram.

PIN DESIGNATION

1	$\overline{WR}$	**Write Enable**: active LOW input which operates in conjunction with $\overline{CS}$ and A0 to allow writing to the internal registers.
2	$\overline{CS}$	**Chip Select**: active LOW input to identify valid $\overline{WR}$ inputs to the chip. This input also operates in conjunction with $\overline{WR}$ and A0 to allow writing to the internal registers.
3	A0	**Control/Address select**: input used in conjunction with $\overline{WR}$ and $\overline{CS}$ to load data to the control register (A0 = 0) or the address buffer (A0 = 1).
4	OUTR	**Right channel output**: a 7-level current sink analogue output for the 'right' component. This pin requires an external load resistor.
5	OUTL	**Left channel output**: a 7-level current sink analogue output for the 'left' component. This pin requires an external load resistor.
6	I_{ref}	**Reference current supply**: used to bias the current sink outputs.
7	$\overline{DTACK}$	**Data Transfer Acknowledge**: open drain output, active LOW to acknowledge successful data transfer. On completion of the cycle $\overline{DTACK}$ is set to inactive.
8	CLK	**Clock**: input for an externally generated clock at a nominal frequency of 8 MHz.
9	V_{SS}	**Ground**: 0 V.
10-17	D0-D7	**Data**: Data bus input.
18	V_{DD}	**Power supply**: + 5 V typical.

FUNCTIONAL DESCRIPTION

The following sections provide a detailed functional description of the SAA1099 as shown in the block diagram, Fig. 1.

Frequency generators

Six frequency generators can each select one of 8 octaves and one of 256 tones within an octave. A total frequency range of 30 Hz to 7,74 kHz is available. The outputs may also control noise or envelope generators. All frequency generators have an enable bit which switches them on and off, making it possible to preselect a tone tone and to make it inaudible when required.

The frequency ranges per octave are:

Octave	Frequency range
0	30 Hz to 60 Hz
1	60 Hz to 122 Hz
2	122 Hz to 244 Hz
3	244 Hz to 488 Hz
4	489 Hz to 976 Hz
5	978 Hz to 1,95 kHz
6	1,95 kHz to 3,90 kHz
7	3,91 kHz to 7,81 kHz

Noise generators

The two noise generators both have a programmable output. This may be a software controlled noise via one of the frequency controlled generators or one of three pre-defined noises. There is no tone produced by the frequency generator when it is controlling the noise generator. The noise produced is based on double the frequency generator output, i.e. a range of 61 Hz to 15,6 kHz.
In the event of a pre-defined noise being chosen, the output of noise generator 0 can be mixed with frequency generator 0, 1 and 2; and the output of noise generator 1 can be mixed with frequency generator 3, 4 and 5. In order to produce an equal level of noise and tone outputs (when both are mixed) the amplitude of the tone is increased. The three pre-defined noises are based on a clock frequency of 7,8 kHz, 15,6 kHz or 31,25 kHz.

Noise/frequency mixers

Six noise/frequency mixers each with four selections

- Channel off
- Frequency only
- Noise only
- Noise and frequency

Each mixer channel has one of the frequency generator outputs fed to it, three channels use noise generator 0 and the other three use noise generator 1.

Amplitude controllers

Each of the six channel outputs from the mixer is split up into a right and left component giving effectively twelve amplitude controllers. An amplitude of 16 possible levels is assigned to each of the twelve signals. With this configuration a stereo effect can be achieved by varying only the amplitude component. The moving of a sound from one channel to the other requires, per tone, only one update of the amplitude register contents.
When an envelope generator is used, the amplitude levels are restricted. The number of levels available is then reduced to eight. This is achieved by disabling the least significant bit (LSB) of the amplitude control.

Envelope controllers

Two of the six tone generators are under envelope control. This applies to both the left and right outputs from the tone generator.
The envelope has the following eight possible modes:

- Amplitude is zero
- Single attack
- Single decay
- Single attack-decay (triangular)
- Maximum amplitude
- Continuous attack
- Continuous decay
- Continuous attack-decay

The timing of the envelope controllers is programmable using one of the frequency generators (see Fig. 1). When the envelope mode is selected for a channel its control resolution is halved for that channel from 16 levels to 8 levels by rounding down to the nearest even level.
There is also the capability of controlling the 'right' component of the channel with inverse of the 'left' component, which remains as programmed.

A direct enable permits the start of an envelope to be defined, and also allows termination of an envelope at any time. The envelope rate may be controlled by a frequency channel (see Fig. 1), or by the microprocessor writing to the address buffer register. If the frequency channel controlled is OFF (NE = FE = 0) the envelope will appear at the output, which provides an alternative 'non-square' tone capability. In this event the frequency will be the envelope rate, which provided the rate is from the frequency channel, will be a maximum of 1 kHz. Higher frequencies of up to 2 kHz can be obtained by the envelope resolution being halved from 16 levels to 8 levels. Rates quoted are based on the input of a 8 MHz clock.

Six-channel mixers/current sink analogue output stages

Six channels are mixed together by the two mixers allowing each one to control one of six equally weighted current sinks, to provide a seven level analogue output.

Command/control select

In order to simplify the microprocessor interface the command and control information is multiplexed. To select a register in order to control frequencies, amplitudes, etc. the command-register has to be loaded. The contents of this register determines to which register the data is written in the next control-cycle. If a continuous update of the control-register is necessary, only the control-information has to be written (the command-information does not change).
If the command/control select (A0) is logic 0, the byte transfer is control; if A0 is logic 1, the byte transfer is command.

Interface to microprocessor

The SAA1099 is a data bus based I/O peripheral. Depending on the value of the command/control signal (A0) the $\overline{CS}$ and $\overline{WR}$ signals control the data transfer from the microprocessor to the SAA1099. The data-transfer-acknowledge ($\overline{DTACK}$) indicates that the data transfer is completed. When, during the write cycle, the microprocessor recognizes the $\overline{DTACK}$, the bus cycle will be completed by the processor.

RATINGS

Limiting values in accordance with the Absolute Maximum System (IEC 134)

Supply voltage (pin 18)	V_{DD}		−0,3 to + 7,5	V
Maximum input voltage	V_I		−0,3 to + 7,5	V
at V_{DD} = 4,5 to 5,5 V	V_I		−0,5 to + 7,5	V
Maximum output current	I_O	max.	10	mA
Total power dissipation	P_{tot}		450	mW
Storage temperature range	T_{stg}		−55 to + 125	°C
Operating ambient temperature range	T_{amb}		0 to + 70	°C
Electrostatic handling*	V_{es}		−1000 to + 1000	V

* Equivalent to discharging a 250 μF capacitor through a 1 kΩ series resistor.

D.C. CHARACTERISTICS

V_{DD} = 5 V; T_{amb} = 0 to 70 °C; unless otherwise specified

parameter	symbol	min.	typ.	max.	unit
Supply					
Supply voltage	V_{DD}	4,5	5,0	5,5	V
Supply current	I_{DD}	–	55	90	mA
Reference current (note 1)	I_{ref}	100	250	400	μA
INPUTS					
Input voltage HIGH	V_{IH}	2,0	–	6,0	V
Input voltage LOW	V_{IL}	−0,5	–	0,8	V
Input leakage current	$\pm I_{LI}$	–	–	10	μA
Input capacitance	C_I	–	–	10	pF
OUTPUTS					
$\overline{DTACK}$ (open drain; note 2)					
Output voltage LOW at I_{OL} = 3,2 mA	V_{OL}	0	–	0,4	V
Voltage on pin 7 (OFF state)	$V_{7\text{-}9}$	−0,3	–	6,0	V
Output capacitance (OFF state)	C_O	–	–	10	pF
Load capacitance	C_L	–	–	150	pF
Output leakage current (OFF state)	$-I_{LO}$	–	–	10	μA
Audio outputs (pins 4 and 5)					
With fixed I_{ref} (note 3)					
One channel on	I_{01}/I_{ref}	90	–	125	%
Six channels on	$I_{06}/6xI_{ref}$	85	–	120	%
With I_{ref} = 250 μA; R_L = 1,1 kΩ (± 5%)					
One channel on	I_{01}/I_{ref}	95	–	115	%
Six channels on	$I_{06}/6xI_{ref}$	90	–	110	%
Output current one channel on	I_{01}	238	–	288	μA
Output current six channels on	I_{06}	1,38	–	1,65	mA
With resistor supplying I_{ref} (note 4)					
Output current one channel on	I_{01}	155	–	270	μA
Output current six channels on	I_{06}	0,94	–	1,65	mA
Load resistance	R_L	600	–	–	Ω
D.C. leakage current all channels off	$-I_{LO}$	–	–	10	μA
Maximum current difference between left and right current sinks (note 5)	$\pm I_{Omax}$	–	–	15	%
Signal-to-noise ratio (note 6)	S/N	–	tbf	–	dB

A.C. CHARACTERISTICS

V_{DD} = 5 V; T_{amb} = 0 to 70 °C; timing measurements taken at 2,0 V for a logic 1 and 0,8 V for a logic 0 unless otherwise specified (see waveforms Figs 3 and 4)

parameter	symbol	min.	typ.	max.	unit
Bus interface timing (see Fig. 3)					
A0 set-up time to $\overline{CS}$ fall	t_{ASC}	0	–	–	ns
$\overline{CS}$ LOW to $\overline{WR}$ fall	t_{CSW}	30	–	–	ns
A0 set-up time to $\overline{WR}$ fall	t_{ASW}	50	–	–	ns
$\overline{WR}$ LOW time	t_{WL}	100	–	–	ns
Data bus valid to $\overline{WR}$ rise	t_{BSW}	100	–	–	ns
$\overline{DTACK}$ fall delay from $\overline{WR}$ fall (note 7)	t_{DFW}	0	–	85	ns
A0 hold time from $\overline{WR}$ HIGH	t_{AHW}	0	–	–	ns
$\overline{CS}$ hold time from $\overline{WR}$ HIGH	t_{CHW}	0	–	–	ns
Data bus hold time from $\overline{WR}$ HIGH	t_{DHW}	0	–	–	ns
$\overline{DTACK}$ rise delay from $\overline{WR}$ HIGH	t_{DRW}	0	–	100	ns
Bus cycle time (note 8)	t_{CY}	2CP	–	–	
Bus cycle time (note 9)	t_{CY}	8CP	–	–	
Clock input timing (see Fig. 4)					
Clock period	t_{CLK}	120	125	255	ns
Clock LOW time	t_{HIGH}	55	–	–	ns
Clock HIGH time	t_{LOW}	55	–	–	ns

Notes to the characteristics

1. Using an external constant current generator to provide a nominal I_{ref} or external resistor connected to V_{DD}.
2. This output is short-circuit protected to V_{DD} and V_{SS}.
3. Measured with I_{ref} a constant value between 100 and 400 μA; load resistance (R_L) allowed to match E24 (5%) in all applications via:

$$R_L = \frac{0{,}27775 \pm 0{,}03611}{I_{ref}}.$$

4. Measured with R_{ref} = 10 kΩ (± 5%) connected between I_{ref} and V_{DD}; R_L = 820 Ω (± 5%); OUTR and OUTL short-circuit protected to V_{SS}.
5. Left and right outputs must be driven with identical configuration.
6. Sample tested value only.
7. This timing parameter only applies when no wait states are required; otherwise parameter is invalid.
8. The minimum bus cycle time of two clock periods is for loading all registers except the amplitude registers.
9. The minimum bus cycle time of eight clock periods is for loading the amplitude registers. In a system using $\overline{DTACK}$ it is possible to achieve minimum times of 500 ns. Without $\overline{DTACK}$ the parameter given must be used.

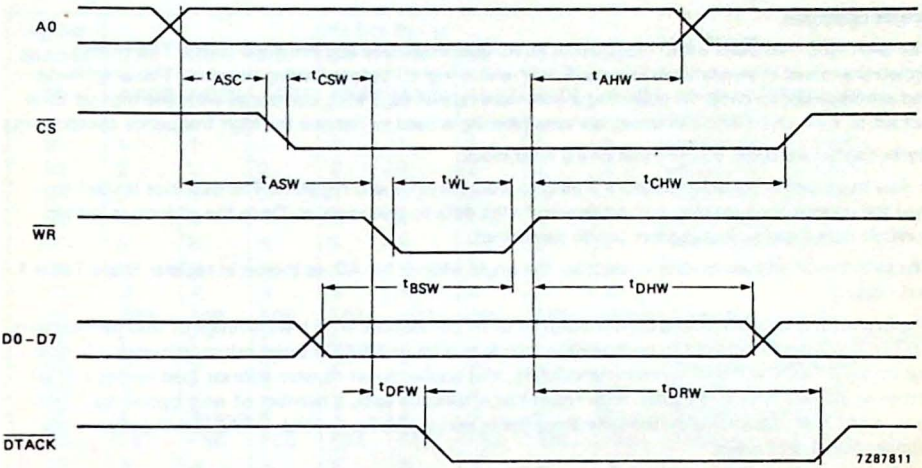

Fig. 3 Bus interface waveforms.

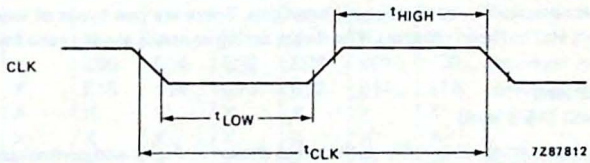

Fig. 4 Clock input waveform.

APPLICATION INFORMATION

Device operation

The SAA1099 uses pulse width modulation to achieve amplitude and envelope levels. The twelve signals are mixed in an analogue format (6 'left' and 6 'right') before leaving the chip. The amplitude and envelope signals chop the output at a minimum rate of 62,5 kHz, compared with the highest tone output of 7,74 kHz. Simple external low-pass filtering is used to remove the high frequency components.

Rates quoted are based on the input of a 8 MHz clock.

A data bus based write only structure is used to load the on-board registers. The data bus is used to load the address for a register, and subsequently the data to that register. Once the address is loaded multiple data loads to that register can be performed.

The selection of address or data is made by the single address bit A0, as shown in register maps Table 1 and Table 2.

The bus control signals $\overline{WR}$ and $\overline{CS}$ are designed to be compatible with a wide range of microprocessors, a $\overline{DTACK}$ output is included to optimise the interface with an S68000 series microprocessor. In most bus cycles $\overline{DTACK}$ will be returned immediately, this applies to all register address load cycles and all except amplitude data load cycles. With respect to amplitude data, a number of wait cycles may need to be performed, depending on the time since the previous amplitude load. $\overline{DTACK}$ will indicate the number of required waits.

Register description (see Tables 2 and 3)

The amplitudes are assigned with 'left' and 'right' components in the same byte, on a channel by channel basis. The spare locations that are left between blocks of registers is to allow for future expansion, and should be written as zero's. The tone within an octave is defined by eight bits and the octave by three bits. Note that octaves are paired (0/1, 2/3 etc.). The frequency and noise enables are grouped together for ease of programming. The controls for noise 'colour' (clock rate) are grouped in one byte.

The envelope registers are positioned in adjacent locations. There are two types of envelope controls, direct acting controls and buffered controls. The direct acting controls always take immediate effect, and are:

- Envelope enable (reset)
- Envelope resolution (16/8 level)

The buffered controls are acted upon only at the times shown in Fig. 5 and control selection of:

- Envelope clock source
- Waveform type
- Inverted/non-inverted 'right' component

Table 1 External memory map

select	data bus inputs								operations
A0	D7	D6	D5	D4	D3	D2	D1	D0	
0	D7	D6	D5	D4	D3	D2	D1	D0	data for internal registers
1	X	X	X	A4	A3	A2	A1	A0	internal register address

Where X = don't care state.

Table 2 Internal register map.

register address	data bus inputs D7	D6	D5	D4	D3	D2	D1	D0	operations
00	AR03	AR02	AR01	AR00	AL03	AL02	AL01	AL00	amplitude 0 right channel; left channel
01	1	1	1	1	1	1	1	1	amplitude 1 right/left
02	2	2	2	2	2	2	2	2	amplitude 2 right/left
03	3	3	3	3	3	3	3	3	amplitude 3 right/left
04	4	4	4	4	4	4	4	4	amplitude 4 right/left
05	5	5	5	5	5	5	5	5	amplitude 5 right/left
06	X	X	X	X	X	X	X	X	
07	X	X	X	X	X	X	X	X	
08	F07	F06	F05	F04	F03	F02	F01	F00	frequency of tone 0
09	1	1	1	1	1	1	1	1	frequency of tone 1
0A	2	2	2	2	2	2	2	2	frequency of tone 2
0B	3	3	3	3	3	3	3	3	frequency of tone 3
0C	4	4	4	4	4	4	4	4	frequency of tone 4
0D	F57	F56	F55	F54	F53	F52	F51	F50	frequency of tone 5
0E	X	X	X	X	X	X	X	X	
0F	X	X	X	X	X	X	X	X	
10	X	012	011	010	X	002	001	000	octave 1; octave 0
11	X	032	031	030	X	022	021	020	octave 3; octave 2
12	X	052	051	050	X	042	041	040	octave 5; octave 4
13	X	X	X	X	X	X	X	X	
14	X	X	FE5	FE4	FE3	FE2	FE1	FE0	frequency enable
15	X	X	NE5	NE4	NE3	NE2	NE1	NE0	noise enable
16	X	X	N11	N10	X	X	N01	N00	noise generator 1; noise generator 0
17	X	X	X	X	X	X	X	X	
18	E07	X	E05	E04	E03	E02	E01	E00	envelope generator 0
19	E17	X	E15	E14	E13	E12	E11	E10	envelope generator 1
1A	X	X	X	X	X	X	X	X	
1B	X	X	X	X	X	X	X	X	
1C	X	X	X	X	X	X	X	SE	sound enable (all channels)
1D	X	X	X	X	X	X	X	X	
1E	X	X	X	X	X	X	X	X	
1F	X	X	X	X	X	X	X	X	

Where:
All don't cares (X) should be written as zero's.
00 to 1F block of registers repeats eight times in the block between addresses 00 to FF (full internal memory map).

APPLICATION INFORMATION (continued)

Table 3 Register description

bit	description
ARn3; ARn2; ARn1; ARn0 (n = 0,5)	4 bits for amplitude control of right channel 0 0 0 0 minimum amplitude (off) 1 1 1 1 maximum amplitude
ALn3; ALn2; ALn1; ALn0 (n = 0,5)	4 bits for amplitude control of left channel 0 0 0 0 minimum amplitude (off) 1 1 1 1 maximum amplitude
Fn7 to Fn0 (n = 0,5)	8 bits for frequency control of the six frequency generators 0 0 0 0 0 0 0 0 lowest frequency 1 1 1 1 1 1 1 1 highest frequency
On2; On1; On0 (n = 0,5)	3 bits for octave control 0 0 0 lowest octave (30 Hz to 60 Hz) 0 0 1 (60 Hz to 122 Hz) 0 1 0 (122 Hz to 244 Hz) 0 1 1 (244 Hz to 488 Hz) 1 0 0 (489 Hz to 976 Hz) 1 0 1 (978 Hz to 1,95 kHz) 1 1 0 (1,95 kHz to 3,90 kHz) 1 1 1 highest octave (3,91 kHz to 7,81 kHz)
FEn (n = 0,5)	frequency enable bit (one tone per generator) FEn = 0 indicates that frequency 'n' is off
NEn (n = 0,5)	noise enable bit (one tone per generator) NEn = 0 indicates that noise 'n' is off
Nn1; Nn0 (n = 0,1)	2 bits for noise generator control. These bits select the noise generator rate (noise 'colour') Nn1 Nn0 clock frequency (kHz) 0 0 31,3 0 1 15,6 1 0 7,6 1 1 61 to 15,6 (frequency generator 0/2)

bit	description
En7; En5 to En0 (n = 0,1)	7 bits for envelope control En0 0 left and right component have the same envelope 1 right component has inverse of envelope that is applied to left component En3 En2 En1 0 0 0 zero amplitude 0 0 1 maximum amplitude 0 1 0 single decay 0 1 1 repetitive decay 1 0 0 single triangular 1 0 1 repetitive triangular 1 1 0 single attack 1 1 1 repetitive attack En4 0 4 bits for envelope control (maximum frequency = 976 Hz) 1 3 bits for envelope control (maximum frequency = 1,95 kHz) En5 0 internal envelope clock (frequency generator 1 or 4) 1 external envelope clock (address write pulse) En7 0 reset (no envelope control) 1 envelope control enabled
SE	SE sound enable for all channels (reset on power-up to 0) 0 all channels disabled 1 all channels enabled

Note

All rates given are based on the input of a 8 MHz clock.

APPLICATION INFORMATION (continued)

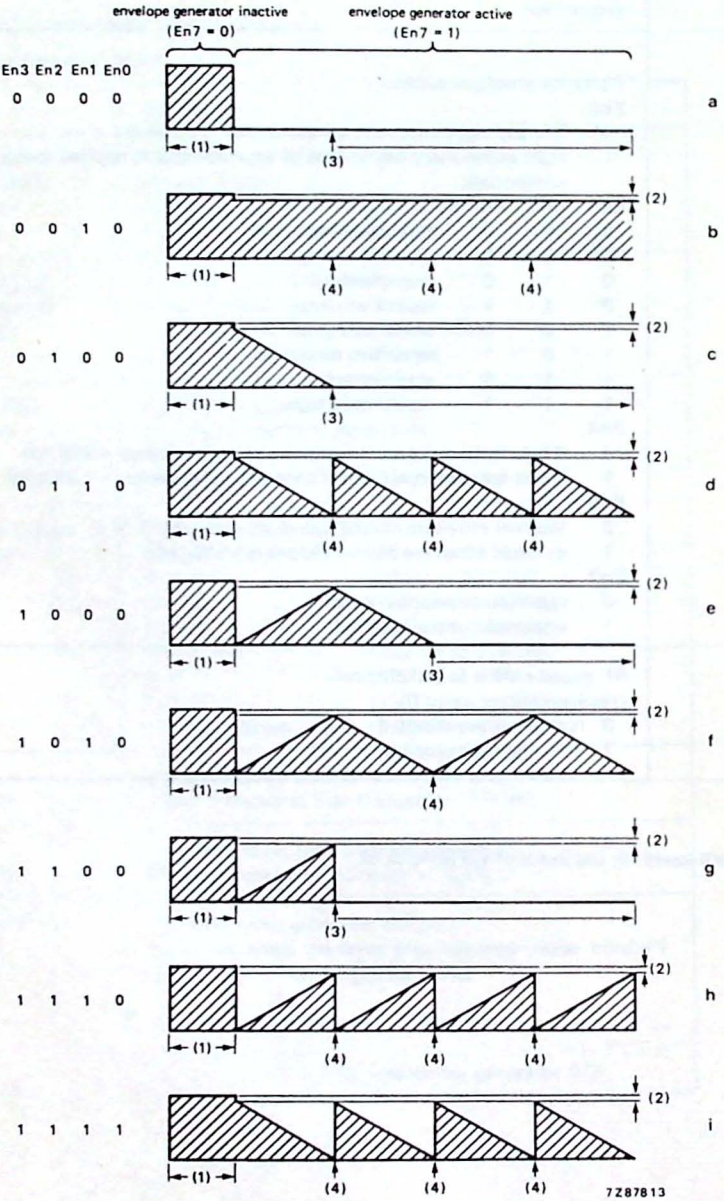

Fig. 5 Envelope waveforms.

VALVO

Notes to Fig. 5

(1) The level at this time is under amplitude control only (En7 = 0; no envelope).

(2) When the generator is active (En7 = 1) the maximum level possible is 15/16ths of the amplitude level, rounded down to the nearest eight. When the generator is inactive (En7 = 0) the level will be 16/16ths of the amplitude level.

(3) After position (3) the buffered controls will be acted upon when loaded.

(4) At positions (4) the buffered controls will be acted upon if already loaded.

(5) Waveforms 'a' to 'h' show the left channel (En0 = 0; left and right components have the same envelope).
Waveform 'i' shows the right channel (En0 = 1; right component inverse of envelope applied to left).

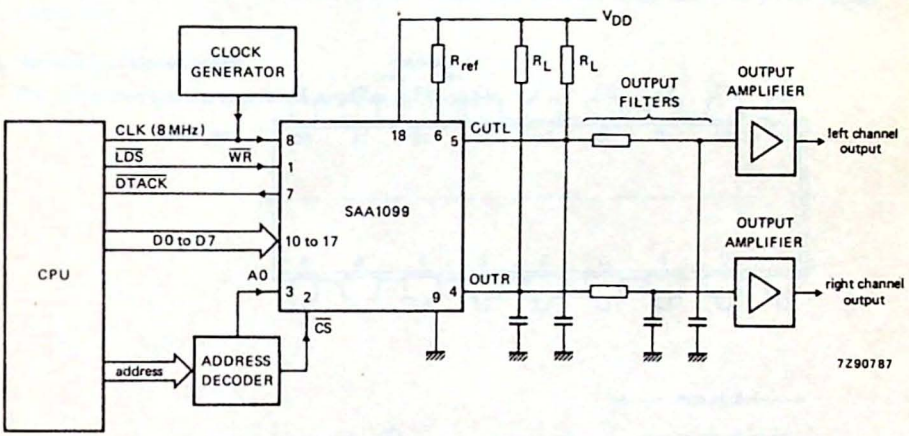

Fig. 6 Typical application circuit diagram.

18-LEAD DUAL IN-LINE; PLASTIC (SOT-102CS)

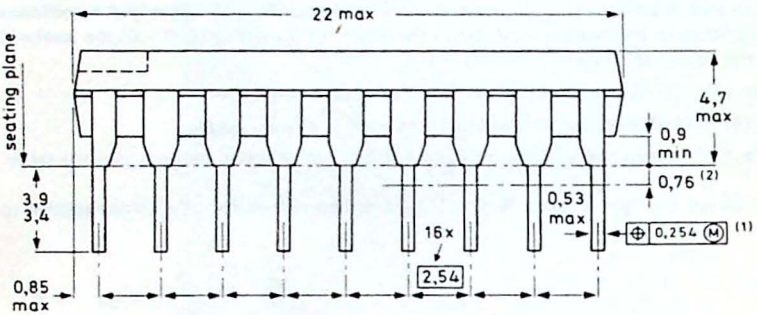

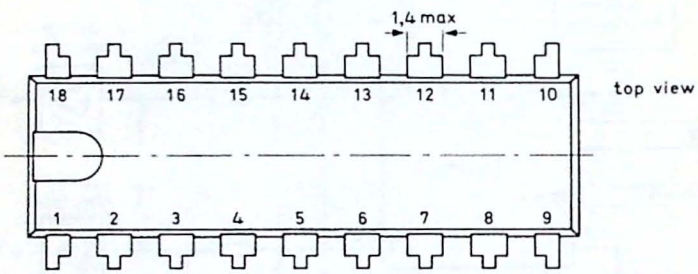

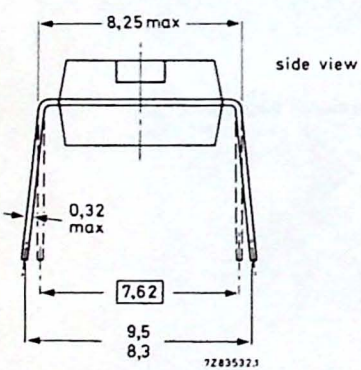

⊕ Positional accuracy.

Ⓜ Maximum Material Condition.

(1) Centre-lines of all leads are within ±0,127 mm of the nominal position shown; in the worst case, the spacing between any two leads may deviate from nominal by ±0,254 mm.

(2) Lead spacing tolerances apply from seating plane to the line indicated.

Dimensions in mm

SOLDERING

See next page.

SOLDERING

1. By hand

Apply the soldering iron below the seating plane (or not more than 2 mm above it).
If its temperature is below 300 °C it must not be in contact for more than 10 seconds; if between 300 °C and 400 °C, for not more than 5 seconds.

2. By dip or wave

The maximum permissible temperature of the solder is 260 °C; this temperature must not be in contact with the joint for more than 5 seconds. The total contact time of successive solder waves must not exceed 5 seconds.
The device may be mounted up to the seating plane, but the temperature of the plastic body must not exceed the specified storage maximum. If the printed-circuit board has been pre-heated, forced cooling may be necessary immediately after soldering to keep the temperature within the permissible limit.

3. Repairing soldered joints

The same precautions and limits apply as in (1) above.

Package Outlines

VALVO

PACKAGES—GENERAL INFORMATION

INTRODUCTION

The following information applies to all packages unless otherwise specified on individual package outline drawings.

General

1. Dimensions shown are metric units (millimeters), except those in parentheses which are English units (inches).
2. Lead spacing shall be measured within this zone.
   a. Shoulder and lead tip dimensions are to centerline of leads.
3. Tolerances non-cumulative
4. Thermal resistance values are determined by utilizing the linear temperature dependence of the forward voltage drop across the substrate diode in a digital device to monitor the junction temperature rise during known power application across V_{CC} and ground. The values are based upon 120 mils square die for plastic packages and a 90 mils square die in the smallest available cavity for hermetic packages. All units were solder mounted to P.C. boards, with standard stand-off, for measurement.

Plastic Only

5. Lead material: Alloy 42 (Nickel/Iron Alloy) Olin 194 (Copper Alloy) or equivalents, solder dipped.
6. Body material: Plastic (Epoxy)
7. Round hole in top corner denotes lead No. 1.
8. Body dimensions do not include molding flash.

Hermetic Only

9. Lead material
   a. ASTM alloy F-15 (KOVAR) or equivalent—gold plated, tin plated, or solder dipped.
   b. ASTM alloy F-30 (Alloy 42) or equivalent—tin plated, gold plated or solder dipped.
   c. ASTM alloy F-15 (KOVAR) or equivalent—gold plated.
10. Body Material
    a. Eyelet, ASTM alloy F-15 or equivalent—gold or tin plated, glass body.
    b. Ceramic with glass seal at leads.
    c. BeO ceramic with glass seal at leads.
    d. Ceramic with ASTM alloy F-30 or equivalent.
11. Lid Material
    a. Nickel or tin plated nickel, weld seal.
    b. Ceramic, glass seal.
    c. ASTM alloy F-15 or equivalent, gold plated, alloy seal.
    d. BeO Ceramic with glass seal.
12. Signetics symbol, angle cut, or lead tab denotes Lead No. 1.
13. Recommended minimum offset before lead bend.
14. Maximum glass climb .010 inches.
15. Maximum glass climb or lid skew is .010 inches.
16. Typical four places.
17. Dimension also applies to seating plane.

THERMAL RESISTANCE

NO. OF LEADS	Θ_{JA}	Θ_{JC}
Plastic DIP		
14	150	65
16	160	75
24	106	49
28	116	53
40	70	50
Ceramic DIP		
14	95	25
16	90	25
28	60	25
40	55	25

*For other ratings not listed here, contact your nearest Signetics sales office.

N PACKAGE — PLASTIC
(16-PIN)

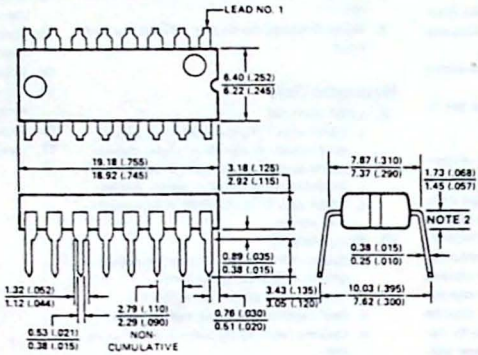

I PACKAGE — HERMETIC
(16-PIN)

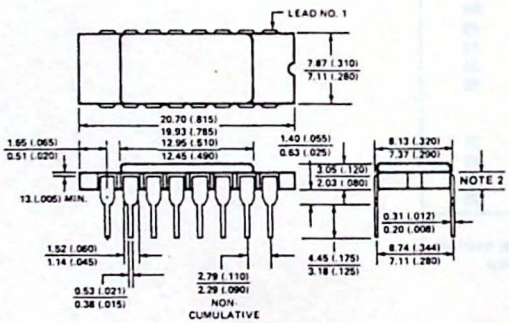

N PACKAGE — PLASTIC SLIM LINE
(24-PIN)

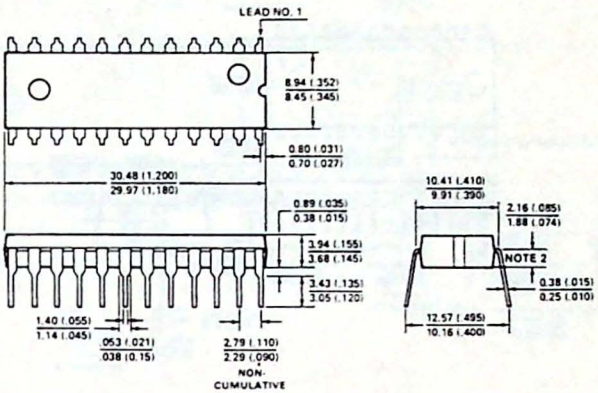

N PACKAGE — PLASTIC
(28-PIN)

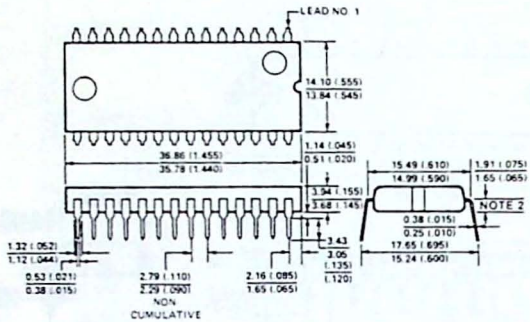

I PACKAGE — HERMETIC
(28-PIN)

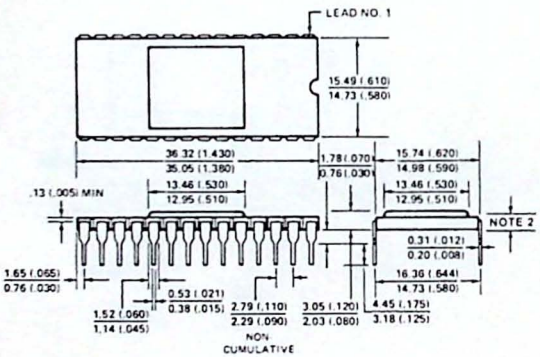

N PACKAGE — PLASTIC
(40-PIN)

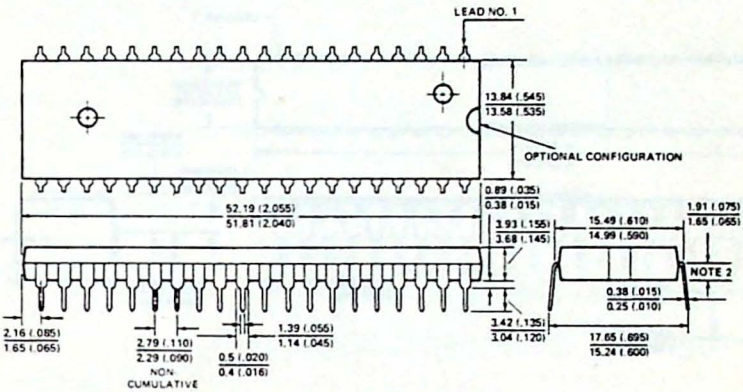

I PACKAGE — HERMETIC
(40-PIN)

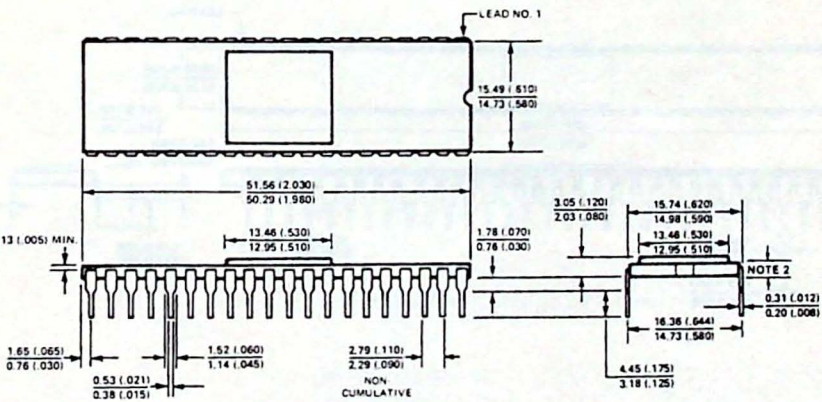

I PACKAGE — HERMETIC
(48-PIN)

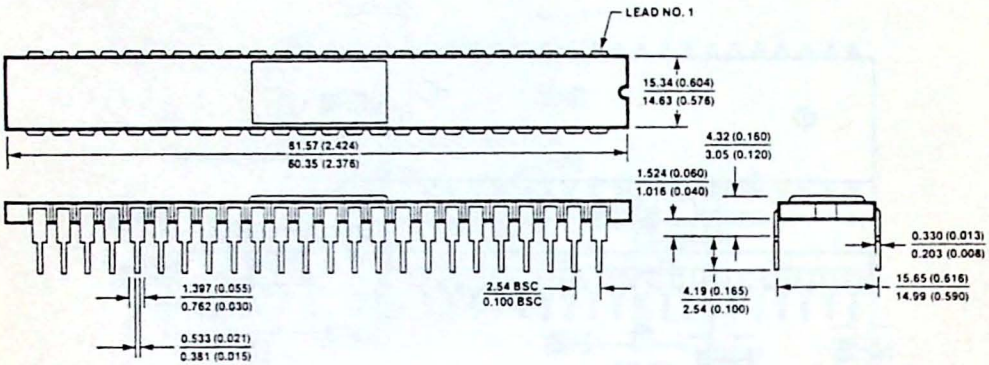

I PACKAGE — HERMETIC
(64-PIN)

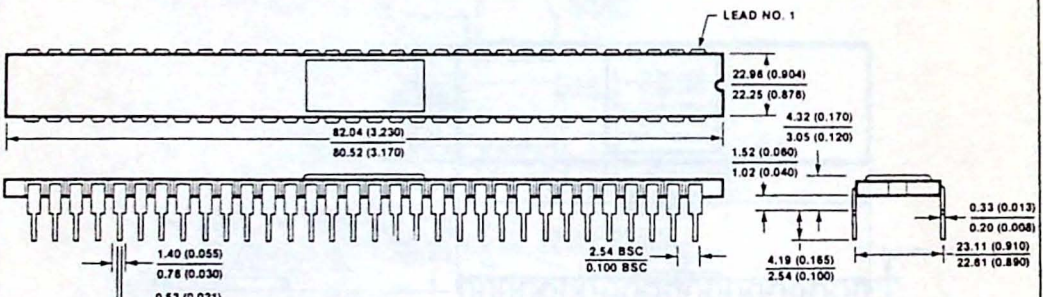

NOTE.
1. If solder dipped terminals used, terminal dimension tolerances may be increased by .001.

Peripheral Circuits for CRT-Controllers

Peripheral Circuits for Data Communication

Peripheral Circuits for Speech Synthesis

Package Outlines

Valvo Unternehmensbereich Bauelemente der Philips GmbH

Burchardstraße 19, Postfach 10 63 23, 2000 Hamburg 1
Telefon (0 40) 32 96–0, Telex 2 15 401–0 va d, Telefax (0 40) 32 96–213

Valvo Zweigbüros

Berlin/Hamburg

Burchardstraße 19
2000 Hamburg 1
Tel. (0 40) 32 96–245 . . . 248
Telex 2 15 401–65 va d

Essen

Lazarettstraße 50
4300 Essen 1
Tel. (02 01) 23 60 01
Telex 8 571 136 siva d

Frankfurt

Theodor-Heuss-Allee 106
6000 Frankfurt/M. 90
Tel. (06 11) 79 13–370/371
Telex 4 12 405 valvo d

Freiburg

Tullastraße 72
7800 Freiburg
Tel. (07 61) 50 80 91
Telex 7 721 627 vav d

Hannover

Ikarusallee 1a
3000 Hannover 1
Tel. (05 11) 63 00 94
Telex 9 230 239 vav d

München

Ridlerstraße 37
8000 München 2
Tel. (0 89) 51 04–372
Telex 5 213 015 siva d

Nürnberg

Bessemerstraße 14
8500 Nürnberg 10
Tel. (09 11) 5 10 91
Telex 6 23 829 vav d

Stuttgart

Höhenstraße 21
7012 Fellbach
Tel. (07 11) 5 40 02–0
Telex 7 254 755 valv d

Valvo Distributoren

Berlin

Aktiv-Electronic GmbH
Ballinstraße 12–14
1000 Berlin 47
Tel. (0 30) 6 84 50 88
Telex 1 85 327

Bremen

Mütron, Müller GmbH & Co.
Bornstraße 22
2800 Bremen 1
Tel. (04 21) 30 56–0
Telex 2 45 325

Frankfurt

Spoerle Electronic KG
Bauelemente Distributor
Max-Planck-Straße 1–3
6072 Dreieich b. Frankfurt
Tel. (0 61 03) 3 04–0
Telex 4 17 972

Göttingen

Retron GmbH
Rodeweg 18
3400 Göttingen
Tel. (05 51) 9 04–0
Telex 9 6 733

Hamburg

Walter Kluxen
Bauelemente für Elektronik
Nordkanalstraße 52
2000 Hamburg 1
Tel. (0 40) 2 37 01–0
Telex 2 162 074

Hannover

Elkose GmbH
Geschäftsbereich Hannover
Vahrenwalder Straße 205–207
3000 Hannover 1
Tel. (05 11) 63 99 63
Telex 9 21 501

München

Sasco GmbH
Hermann-Oberth-Straße 16
8011 Putzbrunn b. München
Tel. (0 89) 46 11–1
Telex 5 29 504

Ultratronik GmbH
Münchnerstraße 6
8031 Seefeld
Tel. (0 81 52) 7 09-0
Telex 5 26 459

Nördlingen

SES Electronics
Vertriebs-GmbH
Oettinger Straße 6
8860 Nördlingen
Tel. (0 90 81) 80 40
Telex 5 1 709

Stuttgart

elecdis Ruggaber GmbH
Hertichstraße 41
7250 Leonberg
Tel. (0 71 52) 6 02–0
Telex 7 24 192

Elkose GmbH
Geschäftsbereich Stuttgart
Bahnhofstraße 44
7141 Möglingen
Tel. (0 71 41) 4 87–1
Telex 7 264 472

Wuppertal

Herbert M. Müller
Vertriebsgesellschaft mbH
Vereinstraße 17
5600 Wuppertal 1
Tel. (02 02) 42 60 16
Telex 8 591 543

Stand Juni 1984